Implementation of sustainable development and innovation principles in construction

SCIENTIFIC EDITING
dr inż. Marta Mazewska
dr inż. Dariusz Tomaszewicz

OSTROŁĘCKIE
TOWARZYSTWO
NAUKOWE

Implementation of the principles of sustainable development and innovation in construction

Implementation of the principles of sustainable development and innovation in construction

SCIENTIFIC EDITORIAL BOARD
dr inż. Marta Mazewska
dr inż. Dariusz Tomaszewicz

Publishing house of the Adam Chętnik Scientific Society in Ostrołęka

Ostrołeka 2025

REVIEWERS:
dr hab. inż. Wojciech Drozd, prof. PK
dr hab. inż. Adam Baryłka, prof. SGGW

ISBN 978-83-68680-20-1

DOI: https://doi.org/ 10.62961/SZFK1390

© Copyright by Publishing house of the Adam Chętnik Scientific Society in Ostrołęka
Ostrołęka 2025

255 publication of the Adam Chętnik Scientific Society in Ostrołęka

Publishing house of the Adam Chętnik Scientific Society in Ostrołęka
07-410 Ostrołęka, ul. Traugutta 9A

tel. 29 764-59-80

www.otn.ostroleka.pl/ct-menu-item-15

e-mail: otn.ostroleka@o2.pl

Cover design: architectural engineer Aleksandra Żuchowska

Typesetting and layout:
Drukowane Literki Ewa K. Czetwertyńska, Łomża

Print:
Drukarnia Hajstra, Grodzisk Mazowiecki

TABLE OF CONTENTS

INTRODUCTION 9

1. Influence of thermo-modernisation on thermal protection and energy consumption costs on the example of multi-family buildings made of large-panel, large-block and traditional technology. ***Cieśliński Krzysztof, Mazewska Marta*** 11

1.1. Introduction 12

1.2. Characteristics of the facilities included in the analysis 14

1.3. Calculation methodology 19

1.4. Calculation temperature on the internal surface of the partition 25

1.5. Temperature distribution in the vertical section of the partition 28

1.6. Determination of the "dew point" 29

1.6.1. Water vapour pressure distribution in a partition 31

1.6.2. Critical surface moisture 33

1.7. Heat transfer coefficients 37

1.7.1. Temperature distribution in the vertical section of the partition 43

1.7.2. Critical surface moisture 51

1.7.3. Water vapour pressure distribution in a partition 54

1.7.4. Analysis of thermal energy consumption for central heating 61

1.8. Summary and conclusions 65

2. The role of construction in achieving sustainable development goals. *Kisel Alena* 75

2.1. Introduction 75

2.2. The impact of construction production on sustainable development goals 77

2.3. A systemic approach to achieving sustainable development in construction 82

2.4. Evolution of consumer value in construction objects as a product of the construction industry 84

2.5. Ecological impact of construction production 85

2.6. The issue of complying with environmental requirements and standards in design and construction 88

2.7. The circular economy in construction as a condition for achieving sustainable development 92

2.8. Conclusions 96

3. Occupational safety engineering in realisation building venture. *Obolewicz Jerzy* 101

3.1. Introduction 102

3.2. Construction project 104

3.3. Work safety 108

3.4. Statistics of accidents at work in construction 114

3.5. Rights and obligations of construction project participants regarding work safety 125

3.6. Summary 134

4. Research into the process of immersing metal stamps and concrete blocks into the soil for the construction of zero-cycle buildings. ***Panteleenko Volodymyr, Holubchenko Oleksandr, Karpushyn Serhii, Slon Viktor*** 141

4.1. Introduction 142

4.2. Identification of the physical essence of the process of immersing models of stamps and blocks into the soil base 143

4.2.1. Purpose and methodology of laboratory research 143

4.2.2. Scheme of the stand for laboratory research 144

4.2.3. Laboratory tests of the process of immersion of stamp models and concrete blocks 146

4.2.4. Field tests of the process of immersion of hollow concrete blocks (foundation shells) 148

4.3. Study of the stress state of stamps using the SolidWorks software package 157

4.3.1. Proposed designs of stamps for the device of building foundations 157

4.3.2. Study of the stress state of a conical die 158

4.3.3. Study of the stress state of a cylindrical stamp 163

4.3.4. Study of the stress state of a prismatic stamp 168

4.3.5. Conclusions 171

4.4. Study of the stress state of concrete blocks in the SolidWorks software complex 172

4.4.1. Concrete block designs for zero-cycle buildings 172

4.4.2. Study of the stress state of prismatic blocks 173

4.4.3. Study of the stress state of hollow conical blocks 176

4.4.4. Study of the stress state of concrete conical blocks with an expanded upper part 181

4.4.5. Conclusions 185

4.5. Methods of immersing stamps and concrete blocks into the soil and zero-cycle construction technology 185

4.5.1. Recommended methods of immersing metal stamps and concrete blocks 185

4.5.2. Proposed technology of pile driver equipment based on a crawler crane 187

4.6. Conclusions 190

5. Prospects for the development of large-panel slab buildings in Europe and Poland in depending of current needs.
Tomaszewicz Dariusz 191

5.1. Introduction 192

5.2. The genesis of the problems of large-panel slab buildings in Europe 194

5.3. The genesis of the problems of large-panel slab buildings in Poland 205

5.4. Repair and modernization works before thermal insulation of large-panel slab buildings 211

5.4.1. Diagnostic tests of three-layer elements 211

5.4.2. The use of new anchorages in the three-layer walls of large-panel slab buildings 213

5.5. Thermomodernization of large-panel slab buildings 218

5.6. EPBD directive on energy performance of buildings 221

5.7. Energy Efficiency Directive (EED) 222

5.8. Renewable Energy Directive (RED) 223

5.9. Conclusions 223

Introduction

The monograph presents an approach for adapting existing buildings to current needs, aligning with both sustainability principles and innovation in construction. Construction is one of the most critical sectors of the economy, significantly affecting the natural environment, quality of life, and socio-economic development. Contemporary challenges such as climate change, increasing consumption of natural resources, urbanization, and the need to improve energy efficiency necessitate a shift in approach to the planning, design, and implementation of construction projects. For this reason, the implementation of sustainable development principles is becoming an indispensable element of responsible construction. This means striving for a balance between environmental, social, and economic aspects at all stages of a building's life cycle—from design and construction to operation and demolition. At the same time, technological developments enable the use of innovative solutions that support the idea of sustainable development. Modern materials, digital design tools, intelligent building management systems, and renewable energy sources not only help reduce the negative impact on the environment but also enhance functionality, comfort, and safety for users. Combining a sustainable approach with innovation allows us to create the buildings of the future – energy-efficient, environmentally friendly, durable, and adapted to the changing needs of society. That is why this topic is of particular importance today and deserves in-depth analysis from an engineering, social, and environmental perspective. The chapters of this monograph address both the thermal protection of buildings and the cost of energy consumption in multi-family buildings across various construction technologies, ultimately exploring the overall role of construction in achieving sustainable development goals. A perspective on the development of large-panel slab buildings in Europe and Poland, and a reference to the pursuit of zero-carbon building performance. In addition, research into the components necessary to realize zero-emission buildings is addressed. A chapter on occupational safety engineering ties together all issues.

mgr inż. Krzysztof Cieśliński
https://orcid.org/0000-0002-6789-6193
e-mail: kcieslinski@gmail.com
Lomza Housing Cooperative

dr inż. Marta Mazewska
https://orcid.org/0009-0007-7760-2500
e-mail: mm955@lomza.mans.edu.pl
International Academy of Applied Sciences in Lomza

1. INFLUENCE OF THERMO-MODERNISATION ON THERMAL PROTECTION AND ENERGY CONSUMPTION COSTS ON THE EXAMPLE OF MULTI-FAMILY BUILDINGS MADE OF LARGE-PANEL, LARGE-BLOCK, AND TRADITIONAL TECHNOLOGY

Abstract

This study determined the characteristics of building partitions before and after thermomodernisation in selected multi-family buildings, making it possible to assess the effects of measures to improve thermal protection. Heat transfer coefficients were calculated, temperatures on the internal surfaces of the walls were determined, and temperature distribution and water vapour pressure in the building envelope were calculated. The possibility of 'dew point' temperatures and mould growth on the internal wall surface was also checked. The data for the calculations were obtained from ŁSM in Łomża, whose resources included three multi-family buildings constructed in various technologies, which were the subject of the considerations. The analyses made it possible to conclude that thermo-modernisation measures significantly reduce thermal energy consumption for central heating.

Keywords: thermo-modernisation, heat transfer coefficient, dew point, critical surface humidity, vapour pressure

1.1. Introduction

One of the main tasks of building thermal physics is to compile databases of coefficients and establish empirical dependencies of the heat transfer and temperature compensation coefficients on the density and type of material, temperature, humidity, and other factors, as well as specifying the calculated and declared values of these coefficients. Building thermal protection is the totality of practical applications of building thermal physics. It is based on the algorithms and research results of this branch of science and on the knowledge of the properties of the building materials used for thermal insulation and the wider construction industry (Pogorzelski 2001).

Heat is one of the main factors influencing the comfort of living or staying on the premises of residential and public buildings. It influences our well-being, efficiency, productivity, and financial aspects of rationalizing the property's maintenance costs during its exploitation phase. Thus, when planning the construction of a house, attention should be paid not only to its square footage architectural attractiveness but, above all, to energy efficiency, which is closely related to the reduction of heat loss and, consequently, to the reduction of operating costs and the impact on environmental protection by reducing carbon dioxide emissions into the atmosphere (Adamczyk-Królak 2014).

On average, single and multi-family houses and public buildings account for around 41% of total energy consumption in the European Union. It is therefore becoming indispensable to search for methods to rationalise the costs of thermal energy consumption (Fox, Secret 2016).

Many scientific works address the energy efficiency issue in multi-family buildings (Wichowski, Banaszak 2015). Buildings erected in the past in large-plate technology, by definition, cannot meet today's thermal-energy requirements (Dębowski 2012). Studies conducted on the analysis of the thermal insulating power of external walls of buildings constructed with large-plate technology (Dohojda, Wiśniewski 2019) confirmed the deterioration of the thermal insulating power of partitions, mainly due to the use of concrete with increased density. Defects and errors due to workmanship or damage to the thermal insulation layers and numerous thermal bridges also had an impact.

The technological solutions used in residential and commercial buildings have progressed significantly in recent years. From architectural solutions to heating technology, increasingly sophisticated technical innovations are now being used to improve the quality of life in buildings. Intelligent buildings, with the help of innovative systems, have become not only

more comfortable but also safer. Rapidly developing technologies make it possible to apply these modern solutions to the buildings we live in daily.

Until recently, systems enabling intelligent control of building equipment and installations were only a dream for designers and future occupants of premises. This is becoming an everyday reality, and traditional solutions are slowly being replaced by standards that allow intelligent building control (Szewczyk 2012).

The Łomża Housing Cooperative (ŁSM) in Łomża is the largest and oldest cooperative in the city. It was established in 1958, and currently, its land covers an area of almost 67 hectares. In all the years of its activity, 185 multi-family residential buildings with 8583 flats have been erected in this area. The resources of ŁSM in Łomża also includes 38 single-family houses, 282 commercial premises, and 628 garages. The surface area of the dwellings alone, including the single-family houses, is 312,627.00 m^2.

For over 60 years of its history, ŁSM in Łomża has participated in the development of all technologies related to both the construction process itself and the continuous progression of improvements in the operation of buildings. There has been an evolution in the field of construction solutions and considerable progress in the properties of building materials. Directly related to the worldwide trends of constant modernisation of building properties is also the policy of the Board of the ŁSM in Łomża, which consists in striving to eliminate the technological differences in the buildings successively put into use, starting from the first one, from the end of the 1950s to the investments currently in progress. All modernisation processes occurcontinuously improve the comfort of living while rationalising the costs residents incur in terms of service charges. It should be noted that an important component of these charges, accounting for as much as 40% of the total operating costs, is the cost of central heating. This fact determines the need for the Management Board of the Cooperative to ensure an appropriate comfort level at the lowest possible cost of supplying heat energy to each flat.

This study aimed to assess the effects of thermomodernisation measures to improve the thermal protection of buildings carried out in the resources of ŁSM in Łomża, and to relate them to the provisions of the Regulation of the Minister of Infrastructure on the technical conditions to be met by buildings and their location (Journal of Laws of 2002, No. 75, item 690, as amended), including in particular the requirements for thermal insulation contained in Appendix No. 2 of the aforementioned Regulation, which came into force from 2021.

1.2. Characteristics of the facilities included in the analysis

The analysis included three multi-family buildings where thermomodernisation was carried out, selected from the resources of the Łomża Housing Cooperative in Łomża. These are buildings located in Łomża at:

- 6 Jędrzej Śniadeckiego Street,
- 12 Hugona Kołłątaja Street,
- 1 Juliana Ursyna Niemcewicza Street.

Multi-family building at 6 J. Śniadeckiego Street
Location: Łomża, lot No. 12232/7
Date of commissioning: 1984
Number of storeys: 5 + basement
Number of staircases: 4
Length: 60.30 m
Width: 9.80 m
Height: 14.82 m

Particulars:

–	Number of dwellings	45
–	Number of inhabitants	145
–	Living area	1576,50 m^2
–	Auxiliary area	655,00 m^2
–	Usable area	2231,50 m^2
–	Built-up area	601,77 m^2
–	Cubic capacity	9876,20 m^3

Delivery system:
- OWT-67/N technology,
- Large slab building in a box system,
- Load-bearing wall layout: cruciform,
- Modular spans used: 2 x 4.80 x 5.40 x 2.70.

The insulation work on the building at 6 J. Śniadeckiego Street was carried out in two stages.

The first stage of thermomodernisation was carried out in 2002 based on the "Insulation project for a multi-family residential building at

6 Śniadeckiego Street in Łomża". It included insulation of the gable walls of the building. In 2007, based on the "Thermomodernisation project for a multi-family residential building at 6 Śniadeckiego Street in Łomża, plot no. 12232/7", the second and final stage of work was carried out.

The technology for the execution of both stages of wall insulation is the light wet method (BSO). Dates of final acceptance of works:

- Stage I: 10 October 2002,
- Stage II: 30 July 2007.

Tab. 1. Scope of thermo-modernisation works in the building at 6 J. Śniadeckiego St.

Lp.	Building element – year of construction	Scope of works
1	**External gable walls above ground – 2002**	Light-wet insulation using 10 cm thick polystyrene foam – thermal insulation layer with thermal resistance R=2.50 m2· K/W
2	**External longitudinal basement walls – 2007**	15 cm thick polystyrene insulation to a depth of 1 m below ground level – thermal insulation layer with thermal resistance R=3.75 m^{2}· K/W
3	**Longitudinal external walls above ground – 2007**	Light-wet insulation using 12 cm thick polystyrene foam – thermal insulation layer with thermal resistance R=3.00 m^{2}· K/W
4	**Vestibule walls – 2007**	Light-wet insulation using 14 cm thick polystyrene foam – thermal insulation layer with thermal resistance R=3.50 m^{2}· K/W
5	**Ventilated flat roof – 2007**	14 cm thick mineral wool granulate insulation – thermal insulation layer with thermal resistance R=3.50 m^{2}· K/W
6	**Canopies over vestibules – 2007**	Insulation with 15 cm thick mineral wool hardboard – thermal insulation layer with thermal resistance R=3.75 m^{2}· K/W
7	**Roof over expansion vessel – 2007**	Insulation with 15 cm thick mineral wool rigid boards – thermal insulation layer with thermal resistance R=3.75 m^{2}· K/W
8	**Window frames in stairwells and basements – 2007**	Replacement of windows with new PVC windows with a heat transfer coefficient of U=1.70 W/(m^{2}· K)

Source: Archives of the ŁSM in Łomża

Multi-family building at 12 H. Kołłątaja Street
Location: Łomża, lot No. 12240/3
Date of commissioning: 1992
Number of storeys: 3 + basement
Number of staircases: 4
Length: 57.98 m, 18.61 m
Width: 15.10 m, 14.74 m
Height: 12.94 m

Particulars:

–	Number of dwellings	30
–	Number of inhabitants	99
–	Living area	1051,50 m^2
–	Usable area	1646,10 m^2
–	Building area	868,90 m^2
–	Cubic capacity	10294,00 m^3

Delivery system:
- Basements – "Żerań brick",
- Overground storeys – traditional,
- Modular spans used were: 3.0 m; 3.6 m; 4.2 m; 4.8 m; 6.0 m.

The thermal insulation work on the building at 12 H. Kołłątaja St. was carried out in one stage 2015. The works were carried out based on the "Construction project for thermal insulation, renovation of the colour disposition of the residential building at 12 Kołłątaja Street in Łomża, plot no. 12240/3". The technology of wall insulation: light wet method (ETICS).

Date of final acceptance of works: 26 June 2015.

Table 2. Scope of thermo-modernisation works in the building at 12 H. Kołłątaja Street

Lp.	Building element	Scope of works
1	**External longitudinal and gable walls of the basement**	Insulation with 8 cm thick extruded polystyrene to a depth of 1.20 m below ground level – thermal insulation layer with thermal resistance R=2.29 $m^{2\cdot}$ K/W
2	**External longitudinal and gable walls of the superstructure**	Light-wet insulation using 12 cm thick polystyrene foam – thermal insulation layer with thermal resistance R=3.00 $m^{2\cdot}$ K/W
3	**Attic walls (wall above the ceiling of the last storey) on the side of the ventilation void**	10 cm thick mineral wool insulation – thermal insulation layer with thermal resistance R=2.50 $m^{2\cdot}$ K/W
4	**Attic walls (wall above the ceiling of the last storey) on the sheathing side made of trapezoidal sheet metal**	Light-wet insulation using 12 cm thick polystyrene foam – thermal insulation layer with thermal resistance R=3.00 $m^{2\cdot}$ K/W
5	**Loggia roof panels over the top floor**	Top insulation with 10 cm thick polystyrene foam – thermal insulation layer with thermal resistance R=2.50 $m^{2\cdot}$ K/W
6	**Loggia side walls**	4 cm thick polystyrene insulation – thermal insulation layer with thermal resistance R=1.00 $m^{2\cdot}$ K/W
7	**Loggia slabs over the top floor**	Bottom insulation with 10 cm thick polystyrene foam – thermal insulation layer with thermal resistance R=2.50 $m^{2\cdot}$ K/W

Source: Archives of the ŁSM in Łomża

Multi-family building at 1 J. U. Niemcewicza Street

Location: Łomża, lot No. 12275/13

Date of commissioning: 1994

Number of storeys: 5 + basement

Number of staircases: 6

Length: 52.88 m, 57.53 m

Width: 12.35 m, 12.92 m

Height: 17.85 m

Particulars:

– Number of dwellings 75
– Number of inhabitants 195
– Living area 2235,20 m2
– Usable area 3572,20 m2
– Built-up area 1141,00 m2
– Cubic capacity 18376,00 m^3

Delivery system:

- Walls of "Żerań brick" blocks,
- Transverse structural layout,
- The modular spans used were: 6.0m; 5.4m; 4.8m; 4.2m; 3.6m; 3.0m.

Insulation works in the building at 1 J. U. Niemcewicza Street was carried out in one stage in 2014. The works were carried out based on the "Construction project for thermal insulation, renovation of the colour disposition of the residential building at 1 Niemcewicza Street in Łomża, plot no. 12275/13".

Wall insulation technology: light-wet method (ETICS).

Date of final acceptance of works:

- 29 August 2014.

Tab. 3. Scope of thermo-modernisation works in the building at 1 J.U. Niemcewicza Street

Lp.	Building element	Scope of works
1	**External basement walls**	Insulation with 8 cm thick extruded polystyrene to a depth of 1.20 m below ground level – thermal insulation layer with thermal resistance R=2.29 $m^{2\cdot}$ K/W
2	**Longitudinal external walls and gables of the superstructure**	Light-wet insulation using 12 cm thick polystyrene foam – thermal insulation layer with thermal resistance R=3.00 $m^{2\cdot}$ K/W, wall sections with a width of 4 m insulation with 12 cm thick mineral wool – thermal insulation layer with thermal resistance R=3.24 $m^{2\cdot}$ K/W

Lp.	Building element	Scope of works
3	**Attic walls on the side of the flat roof**	10 cm thick mineral wool insulation – thermal insulation layer with thermal resistance R=2.70 $m^{2}\cdot$ K/W
4	**Loggia side walls**	Insulation on both sides with 4 cm thick polystyrene – thermal insulation layer with thermal resistance R=1.00 $m^{2}\cdot$ K/W
5	**Panels supporting staircase canopies and loggias**	10 cm thick polystyrene insulation – thermal insulation layer with thermal resistance R=2.50 $m^{2}\cdot$ K/W

Source: Archives of the ŁSM in Łomża

1.3. Calculation methodology

Heat transfer coefficient

Principles for the calculation of the thermal transmittance values$U$ for partitions are set out in PN-EN ISO 6946:2002.

Current requirements concerning the values of heat transfer coefficients U_C of walls, roofs, ceilings and flat roofs for all types of buildings in Poland are set out in Appendix 2 of the Regulation of the Minister of Infrastructure of 12 April 2002 on the technical conditions to be met by buildings and their location.

According to these requirements, the relationship must be fulfilled:

$$U_C \leq U_{C(max)} \tag{1}$$

Tab. 4. Current requirements of $U_{C(max)}$ values for the partitions analysed in the work

Lp.	Partition type and room temperature	Thermal transmittance $U_{C(max)}$ from 1 January 2021 [W/m$^{(2)\cdot K}$].
1	**External walls**	
	a) at t_i> 16ºC	0,20
	b) at 8ºC < $_{t(i)}$< 16ºC	0,45
	c) at t_i< 8ºC	0,90

Lp.	Partition type and room temperature	Thermal transmittance $U_{C(max)}$ from 1 January 2021 [W/m$^{(2)\cdot K}$].
2	**Roofs, soffits and ceilings under unheated attics or over driveways**	
	a) at t_i> 16ºC	0,15
	b) at 8ºC < $_{t(i)}$< 16ºC	0,30
	c) at t_i< 8ºC	0,70
3	**Floors on the ground**	
	a) at t_i> 16ºC	0,30
	b) at 8ºC < $_{t(i)}$< 16ºC	1,20
	c) at t_i< 8ºC	1,50

Source: Appendix 2 of the Regulation of the Minister of Infrastructure of 12 April 2002 on the technical conditions to be met by buildings and their location.

The heat transfer coefficientU_C was calculated from the formula:

$$U_C = U_0 + \Delta U_C \tag{2}$$

in which:
U_0 – heat transfer coefficient determined on the assumption of thermal homogeneity of all the layers of a partition and calculated from the formula:

$$U_0 = \frac{1}{R_T} [W/m^2 \cdot K] \tag{3}$$

The principle of the method for determining total thermal resistanceR_T is:

- calculation of the resistance characterising each thermally homogeneous layer of the partition,
- summation of these component resistances to obtain the total thermal resistance of the envelope including the heat transfer resistance.

The total thermal resistanceR_T of a flat building component, consisting of thermally homogeneous layers perpendicular to the direction of heat flow, should be calculated from the formula:

$$R_T = R_{si} + \sum_{j=1}^{n} R_j + R_{se}\ [m^2 \cdot K/W\ ] \qquad (4)$$

in which:
R_{si} – the design heat transfer resistance at the internal surface of the building envelope, $m^2 \cdot K/W$, taken from Table 5;
R_j – thermal resistance of the jth thermally homogeneous layer of the building envelope, ; $m^2 \cdot K/W$
R_{se} – the design heat transfer resistance at the external surface of the building envelope, $m^2 \cdot K/W$, taken from Table 5.

Tab. 5. Design heat transfer resistance at the internal or external surface of a building envelope

Heat transfer resistance	**Direction of heat flow**		
	up ↑	**horizontal ↔**	**down ↓**
	Design value of heat transfer resistance $[(\mathbf{m^2 \cdot K})/\mathbf{W}]$		
$\boldsymbol{R_{si}}$	0,10	0,13	0,17
$\boldsymbol{R_{se}}$	0,04	0,04	0,04

Source: EN ISO 6946:2002

The thermal resistance of homogeneous layers, with a known thermal conductivity coefficient, is calculated from the formula:

$$\mathrm{R_j} = \frac{\mathrm{d_j}}{\lambda_\mathrm{j}}\ [\mathrm{m^2 \cdot K/W}] \qquad (5)$$

in which:
d_j– thickness of jth homogeneous material layer, ; m
λ_j – calculated thermal conductivity coefficient by material of j-th layer, $W/(m \cdot K)$, e.g. adopted from tables included in PN-EN ISO 12524:2003, PN-EN ISO 10456:2008 or from the national annex NC to PN-EN ISO 6946:1999.

The correction memberΔU_C defines the formula:

$$\Delta U_C = \Delta U_g + \Delta U_f + \Delta U_r \tag{6}$$

in which:
ΔU_g – correction for leaks in the thermal insulation layer,$W/m^2 \cdot K$;
ΔU_f – amendment due to mechanical fasteners piercing the thermal insulation layer,$W/m^2 \cdot K$;
ΔU_r – amendment due to precipitation affecting a roof with an inverted sequence of layers, $W/m^2 \cdot K$

Due to the seamless thermal insulation systems (BSO, ETICS) used in the facilities analysed, only the correctionΔU_f , determined from the formula, was taken into account in the study:

$$\Delta U_f = \propto \frac{\lambda_f n_f A_{f1}}{d_{f1}} \left(\frac{R_1}{R_T}\right)^2 \ [W/m^2 \cdot K] \tag{7}$$

in which:
$\propto$ – coefficient is taken from Table 15, ;m^{-1}
λ_f – thermal conductivity coefficient of the fastener material, ;$W/m \cdot K$
n_f – number of fasteners per 1 $m^2$of area of the partition under consideration, ITB recommendations on :n_f
$n_f = (4-5)\ pcs/m^2$ walls, in the case of polystyrene boards,
$n_f = (4-6)\ pcs/m^2$ walls, in the case of mineral wool panels;
A_{f1} – cross-sectional area of a single connector, ;m^2
d_{f1} – length of the fastener in the thermal insulation layer, ;m
R_1 – thermal resistance of the insulation layer to be pierced, ;$m^2 \cdot K/W$
R_T – thermal resistance of the entire partition,$m^2 \cdot K/W$.

Tab. 6. Factor values $\propto$ substituted into formula 7

Type of connector	α, m^{-1}
Wall anchor between the layers of masonry piercing the thermal insulation material, fastener fixing the thermal insulation panels to the wall	6
Fastener for roof panels	5

Source: EN ISO 6946:2002

The rules for calculating the heat transfer coefficient of a floor on the ground are set out in PN-EN ISO 12831:2006.

This factor, denoted $U_{equiv,bf}$ for floors, depends on:

- the size of the depression below the groundz , calculated from ground level to the level of the underside of the floor slab,
- the amount of heat transfer coefficient U calculated for the floor construction,
- the size of the parameter B'.
- The parameter B' is determined from the formula:

$$B' = \frac{A_g}{\frac{1}{2}P} \text{ [m]} \tag{8}$$

in which:

A_g – the surface area of the floor slab under consideration, including external walls and internal walls, in relation to the free-standing buildingA_g is the total area of the ground floor plan, ;m^2

P – the perimeter of the floor slab under consideration, in relation to a detached building$P$ is the total perimeter of the building, m

In order to calculate$U$ for the floor on the ground, the thermal resistance of the individual layers is determined taking into account the heat transfer resistance on the interior side of the building, ignoring the heat transfer resistance on the ground side.

Based on the calculated values of B' and U, the determination of the value of $U_{equiv,bf}$ is carried out using the data contained in Table No. 16. In doing so, the values that relate to the size of the depression in the area are used (the depression of the buildings analysed in the study was assumed at the level o fz = 1,5 m) as well as the values of B' and U similar to the values occurring in the building under consideration, determining $U_{equiv,bf}$ for intermediate values by means of linear interpolation.

Tab. 7. Values $U_{equiv,bf}$ of the floor of a heated basement as a function of the depression below ground level (dla $z = 1,5$ m), theB' values and the heat transfer coefficient of the floor U_{pod}

z	B'	$U_{equiv,bf}$ $[W/(m^2 \cdot K)]$				
[m]	[m]	Without insulation	U_{pod} 2,00	U_{pod} 1,00	U_{pod} 0,50	U_{pod} 0,25
1,5	2	0,86	0,58	0,44	0,28	0,16
	4	0,64	0,48	0,38	0,26	0,16
	6	0,52	0,40	0,33	0,25	0,15
	8	0,44	0,35	0,29	0,23	0,15
	10	0,38	0,31	0,26	0,21	0,14
	12	0,34	0,28	0,24	0,19	0,14
	14	0,30	0,25	0,22	0,18	0,13
	16	0,28	0,23	0,20	0,17	0,12
	18	0,25	0,22	0,19	0,16	0,12
	20	0,24	0,20	0,18	0,15	0,11

Source: PN-EN ISO 12831:2006

For the calculation of the heat transfer coefficient for a wall in contact with the ground $U_{equiv,bw}$, it is necessary to first determine the value U_{wall}, determined from the resistance of the individual layers of the building envelope under investigation, taking into account the heat transfer resistance only on the internal side (R_{si}).

The calculated coefficient U_{wall} allows the $U_{equiv,bw}$ value to be determined using linear interpolation of the data in Table No. 8 for this purpose.

Tab. 8. Values $U_{equiv,bw}$ of heated underground wall as a function of wall heat transfer coefficient and depth from below ground

U_{wall} $[W/m^2 \cdot K]$	$U_{equiv,bw}$ $[W/m^2 \cdot K]$			
	z = 0 m	**z = 1 m**	**z = 2 m**	**z = 3 m**
0,00	0,00	0,00	0,00	0,00
0,50	0,44	0,39	0,35	0,32
0,75	0,63	0,54	0,48	0,43
1,00	0,81	0,68	0,59	0,53
1,25	0,98	0,81	0,69	0,61
1,50	1,14	0,92	0,78	0,68
1,75	1,28	1,02	0,85	0,74
2,00	1,42	1,11	0,92	0,79
2,25	1,55	1,19	0,98	0,84
2,50	1,67	1,27	1,04	0,88
2,75	1,78	1,34	1,09	0,92
3,00	1,89	1,41	1,13	0,96

Source: PN-EN ISO 12831:2006

1.4. Calculation temperature on the internal surface of the partition

The calculated temperature of the internal surface of the partitionϑ_i in places not directly adjacent to the zones of influence of linear thermal bridges was calculated from the formula:

$$\vartheta_i = t_i - U_C(t_i - t_e)R_i \ [°C] \tag{9}$$

in which:
t_e – calculated outdoor air temperature, ;°C
t_i – design room air temperature, ;°C
R_i – the design heat transfer resistance at the internal surface of a building envelope, which has a value of $0.167 m^2 \cdot K/W$, regardless of the direction of heat flow.

The design values of the outside air temperature (t_e), which are adopted when drawing up the thermal characteristics of building partitions

and calculating the heat demand for space heating, are defined by the PN-EN 12831:2006 standard.

According to this standard, Poland is divided into five climate zones (Fig. 1).

Fig. 1. Division of Poland's area into climate zones depending on the calculation of the external temperature to be used in determining the heat demand for space heating

Source: EN 12831:2006

The design outdoor temperatures for the individual climate zones, according to EN 12831:2006, correspond to the design outdoor air temperatures contained in Polish Standard PN-82/B-02403 (Table 9).

Tab. 9. Calculation values for the outside air temperature

Climate zone	I	II	III	IV	V
t_e [℃]	-16	-18	-20	-22	-24

Source: PN-82/B-02403

The calculated room temperature values (t_i) are laid down in the Regulation of the Minister of Infrastructure on the technical conditions to be met by buildings and their location.

Tab. 10. Calculation values for the air temperature in heated rooms

t_i	Purpose or use of the premises	Examples of rooms
+5℃	– not intended for human habitation, – industrial – during the operation of standby heating (if technology permits)	warehouses without permanent staff, individual garages, parking halls (without refurbishment), battery rooms, engine rooms and crane shafts
+8℃	– where there are no heat gains, and where a single stay of persons in in movement and covering does not exceed 1 hour	stairwells in residential buildings
	– where there are heat gains from process equipment, lighting, etc., in excess of 25 W per 1 m3 room volume	compressor houses, pump houses, forges, quenching and tempering shops, heat treatment departments
+12℃	– where there are no heat gains, intended for permanent occupancy by people who are in outdoor clothing or performing physical work with an energy expenditure greater than 300 W	warehouses and storerooms requiring permanent attendance, entrance lobbies, waiting rooms at auditoriums without cloakrooms
	– where there are heat gains from process equipment, lighting, etc. of 10 to 25 W per 1 m3 room volume	physical workplaces with an energy input of more than 300 W, moulding halls, cold storage engine rooms, battery charging rooms, market halls, fish and meat shops
+16℃	– where there are no heat gains, intended for human habitation: – in outer garments in a sitting and standing position	auditoriums without changing rooms, public toilets, outdoor changing rooms, production halls , gymnasiums
	– without outer covering, on the move or performing physical work with an energy expenditure of up to 300 W	individual kitchens equipped with charcoal burners

t_i	Purpose or use of the premises	Examples of rooms
	– where heat gains from process equipment, lighting, etc., do not exceed 10 W per 1 m3 room volume	
+20℃	– intended for permanent residence of people without outer covering, who do not continuously perform physical work	living rooms, hallways, individual kitchens equipped with gas or electric stoves, office rooms, meeting rooms
+24℃	– intended to be dismantled, – intended for human habitation without clothes	bathrooms, changing rooms, washrooms, showers, swimming pool halls, doctor's offices with patient undressing, infant and nursery rooms, operating theatres

Source: § 134 of the Regulation of the Minister for Infrastructure of 12 April 2002 on the technical conditions to be met by buildings and their location.

1.5. Temperature distribution in the vertical section of the partition

The heat flux density$q$ flowing through a specific partition is determined by the formula:

$$q = U_0(t_i - t_e)\ [\mathrm{W/m^2}] \tag{10}$$

in which:
U_0 – heat transfer coefficient, a value that does not take into account layer inhomogeneities and the influence of thermal bridges,$\mathrm{W/(m^2 \cdot K)}$;
t_i – indoor air (environment) temperature,℃ ;
t_e – outdoor air (environment) temperature, .℃

As a result of the flow of the heat flux$q$, on the individual layers of the partition, temperature drops occur which are products of the density of the heat flux and the value of thermal resistance. On the inner surface of the partition, at the heat transfer resistanceR_{si} , the temperature drop will beqR_{si} , hence the temperature of the inner surface will be expressed by the formula:

$$\vartheta_1 = t_i - qR_{si} = t_i - U_0R_{si}(t_i - t_e)\ [℃] \tag{11}$$

- for heat loss calculations and calculation of partition characteristics is usually taken from$R_{si} = 0{,}13\ \mathrm{m}^2 \cdot \mathrm{K/W}$,
- for the purpose of checking the possibility of condensation on the surface of partitions is usually taken as .$R_{si} = 0{,}25\ \mathrm{m}^2 \cdot \mathrm{K/W}$

At the junction of the first and second layers of the partition, the formula will take the form:

$$\vartheta_2 = t_i - U_0(R_{si} + R_1)(t_i - t_e)\ [°\mathrm{C}] \tag{12}$$

At the junction of the second and third:

$$\vartheta_2 = t_i - U_0(R_{si} + R_1 + R_2)(t_i - t_e)\ [°\mathrm{C}] \tag{13}$$

The final temperature$\vartheta_{u,u+1}$ at the interfaces of each successive material layer can be determined from the formula:

$$\vartheta_{u,u+1} = t_i - U_0\left(R_{si} + \sum_{j=1}^{u} R_j\right)(t_i - t_e)\ [°\mathrm{C}] \tag{14}$$

where the subscript$u$ denotes the consecutive number of the layer under consideration in the partition, counting from the inside of the wall.

1.6. Determination of the "dew point"

Requirements for protecting buildings against damp and biological corrosion are set out in Chapter 4, Section VII of the Regulation of the Minister of Infrastructure of 12 April 2002 on the technical conditions to be met by buildings and their location. These requirements regulate, among other things, the issue of the internal surface temperature of external partitions, but also define criteria for selecting material and construction solutions that prevent mold formation.

In accordance with these guidelines, the condition was checked:

$$\vartheta_i \geq (t_s + 1)\ [°C] \tag{15}$$

in which:
ϑ_i – calculated temperature of the internal surface of the partition, according to formula no. 9, ;°C
t_s – "Dew point" temperature, °C.

Dew point temperature (t_s) – this is the temperature to which the air must be cooled to with a given water vapour content to be cooled down, the vapor will reach its saturated state. It is calculated as the temperature corresponding to the saturation vapour pressurep_{ni}, equal to the valuep_i, calculated from the formula:

$$p_i = \frac{\varphi_i \cdot p_{ni}}{100}\ [\text{hPa}] \tag{16}$$

in which:
p_i – partial pressure of water vapour in the room, hPa;
p_{ni} – partial pressure of saturated water vapour at the design air temperature in the roomt_i , taken from Table NA.3 PN-EN ISO 6946:1999, hPa;
φ_i – calculated relative humidity of the room air (Table 11), %.

Tab. 11. Calculated indoor relative humidity

Lp.	Type of room	Design relative humidityφ_i , %.
1	Premises in public buildings and production buildings where no steam is emitted from open vapour reservoirs or from technological processes and no humidification is used	45
2	Living quarters, including rooms kitchens, bathrooms, toilets; patient rooms in hospitals and sanatoriums, children's rooms in nurseries and kindergartens	55
3	In other areas	based on technological assumptions or moisture balance

Source: NA.2 PN-EN ISO 6946:1999

The dew point t_s is determined according to table NA.3 PN-EN ISO 6946:1999, as the temperature corresponding to the saturation vapour pressure p_n, equal to the valuep_i, calculated from formula no. 16.

1.6.1. Water vapour pressure distribution in a partition

In a designed building envelope, the arrangement of material layers should prevent condensation migrating through the wall between materials in adjacent layers.

EN ISO 13788: 2003 describes a method for determining the annual moisture balance in a building envelope, taking into account condensation in winter and drying out during the summer period, as well as the maximum amount of moisture accumulated from internal condensation. The standard does not consider the drying out of the partition from process and building moisture.

The treatment algorithm is as follows:

1. Determination of the distribution of water vapour pressure at saturation:
   - The partition is divided into layers for which thermal resistance is determined$R$ (according to formula 5) and diffusion-equivalent air layerss_d (according to formula 17),

$$s_d = \mu \cdot d \text{ [m]} \tag{17}$$

in which:
s_d – diffusion equivalent layer thickness, ;m
μ – diffusion resistance factor;
d – thickness of building component layer, ;m

   - the temperature distribution across the cross-section of the partition is determined,
   - for the determined temperatures the water vapour pressure in saturation state is determinedp_{sat} (using the table in the standard or the relation temperature – pressure, table NA.3 PN-EN ISO 6946:1999),

2. Determination of water vapour pressure in the indoor and outdoor environments (formulae 18 and 19),

$$p_i = \frac{\varphi_i \cdot p_{sat\ i}}{100}\ [\text{hPa}] \tag{18}$$

$$p_e = \frac{\varphi_e \cdot p_{sat\ e}}{100}\ [\text{hPa}] \tag{19}$$

in which:
p_i – partial pressure of water vapour in the room, hPa;
p_e – partial pressure of water vapour outside, hPa;
$p_{sat\ i}$ – partial pressure of saturated water vapour at the design air temperature in the room t_i , taken from Table NA.3 PN-EN ISO 6946:1999, hPa;
$p_{sat\ e}$ – partial pressure of saturated water vapour at design air temperature outside t_e , taken from Table NA.3 PN-EN ISO 6946:1999, hPa;
φ_i – calculated relative humidity of the room air, %;
φ_e – calculated outdoor relative humidity, data from the nearest weather station (average monthly relative humidity for the location), %.

3. Comparison of design and limit (saturation state) vapour pressure values,
4. Design assessment.

If one or more contact planes are present, the mass of condensing and evaporating moisture is calculated (calculations are for 12 months).

The saturated vapour pressure values determined for the temperatures at the interfaces of the material layers should be connected by straight lines. The vapour pressure profile should be drawn as a line connecting the vapour pressure values: inner -p_i and outer -p_e . Condensation between the layers does not occur if the vapour pressure profile does not exceed the saturated vapour pressure at any of the interfaces.

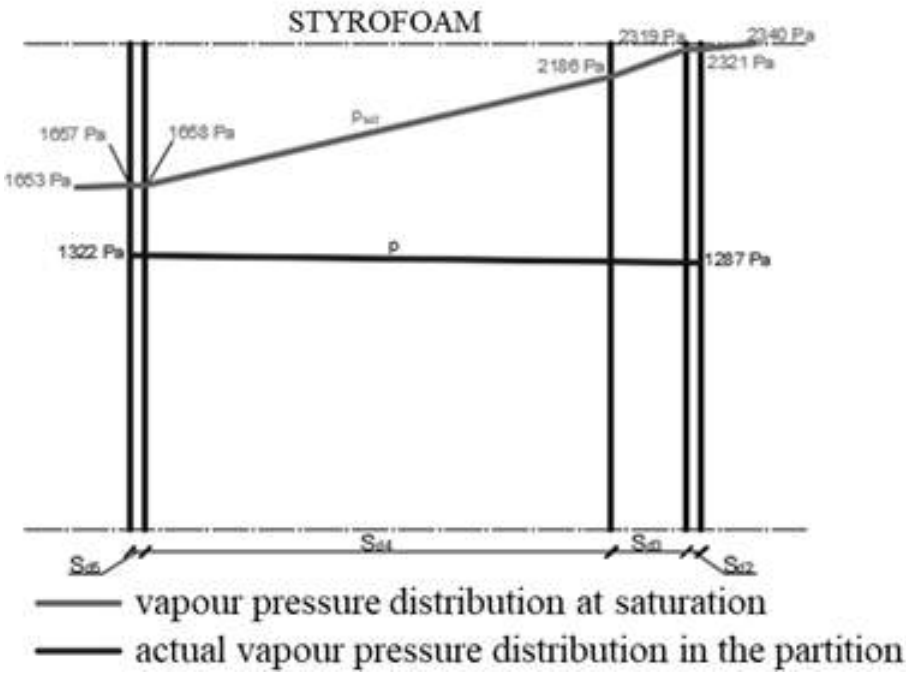

Fig. 2. Example of water vapour pressure distribution in a multi-layer external wall

Source: own elaboration

1.6.2. Critical surface moisture

The possibility of mould occurrence and growth on the surface of moisture-sensitive building materials already arises at a relative humidity of more than 80% and persisting for several consecutive days.

The thermal quality of a building envelope element is characterised by the minimum internal surface temperature (which is a dimensionless value), known as the temperature factor, necessary to avoid critical surface moisture and mould growth -$f_{Rsi,min}$. The following design condition was checked:

$$f_{Rsi} > f_{Rsi,min} \tag{20}$$

in which:
f_{Rsi} – the temperature factor of the designed building component;
$f_{Rsi,min}$ – minimum required temperature medium.

Calculations were carried out for each of the twelve months, determining:

- indoor air humidity,
- the permissible volumetric humidity at saturation or the partial pressure of saturated vapour at the surface,
- by taking the critical relative humidity at the surface and then determining the minimum temperature of the surface under consideration.

The data required for the calculations includes monthly average outdoor air temperatures, relative humidity, and the calculated indoor air temperature.

According to EN ISO 13788, in naturally ventilated rooms, the indoor humidity was determined from the relationship:

$$p_i = p_e + \Delta p \tag{21}$$

in which:
Δp – excess internal water vapour pressure, determined as a function of internal humidity class and external temperature (Fig. 3), in accordance with EN ISO 13788.

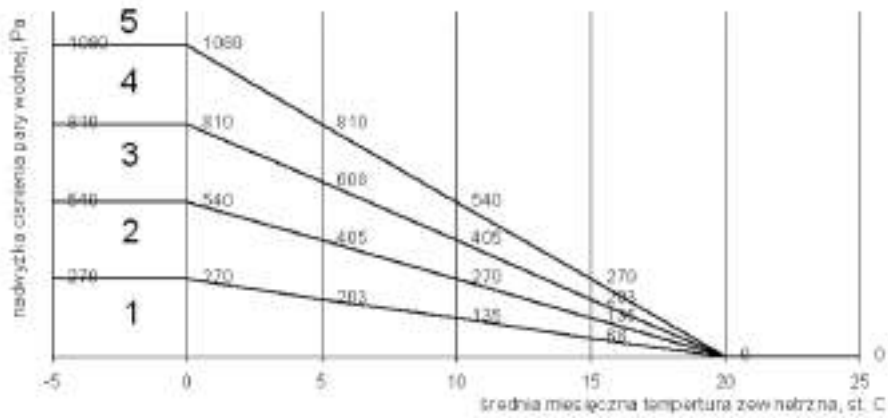

Fig. 3. Relative humidity classes as a function of outside air temperature

Source: EN ISO 13788

In addition, a multiplier of 1.10 for the partial pressure of water vapour is introduced to cover the inaccuracy of the method, resulting from the assumption of steady-state conditions in the calculation. In reality, changes in outside air temperature, solar radiation, sorption inertia and intermittent heating, can affect the surface moisture condition, hence equation 21 takes the form:

$$p_i = p_e + 1.10 \cdot \Delta p \tag{22}$$

Tab. 12. Internal humidity classes

Moisture class	Building or area characteristics	p_{sat}, hPa
1	Storage area,	$p_{sat} < 2{,}7$
2	Offices, shops,	$2{,}7 \leq p_{sat} < 5{,}4$
3	Low-density housing,	$5{,}4 \leq p_{sat} < 8{,}1$
4	Low-density housing, sports halls, kitchens, canteens, buildings heated by gas radiators without flue pipes,	$8{,}1 \leq p_{sat} < 10{,}8$
5	Special buildings (laundries, breweries, swimming pools)	$p_{sat} \geq 10{,}8$

Source: EN ISO 13788

The temperature factor of the designed component f_{Rsi} was determined from the formula:

$$f_{Rsi} = \frac{U^{-1} \cdot R_{si}}{U^{-1}}, [-] \tag{23}$$

in which:
U – the transmittance of the composite wall under consideration (formula 3), $\mathrm{W/(m^2 \cdot K)}$;
R_{si} – value of the heat transfer resistance on the inner surface, $\mathrm{m^2 \cdot K/W}$, recommended by EN ISO 10211-1, (Table 13).

Tab. 13. Calculated heat transfer resistance values R_{si} used to check the criterion of avoiding the risk of surface condensation

In accordance with the standard	R_{si}, $m^2 \cdot K/W$	Type and location of the partition in the room
PN-EN ISO 13788, PN-EN ISO 10211-1	0,13	transparent partition, window frame, door or partition in an unheated room
PN-EN ISO 13788, PN-EN ISO 10211-1	0,25	a component located in the upper area of the room (e.g. below the ceiling) or an external wall covered by a curtain
PN-EN ISO 10211-1	0,35	partition located in the lower part of the room (at the floor, near the window sill)
PN-EN ISO 10211-1	0,50	outer wall obscured by tall furniture while retaining small clearance
PN-EN ISO 10211-1	1,00	external wall with closely integrated furniture fittings

Source: EN ISO 13788, EN ISO 10211-1

The value of the minimum temperature factor $f_{Rsi,min}$ was determined from the formula:

$$f_{Rsi,min} = \frac{\theta_{si,min} - \theta_e}{\theta_i - \theta_e}, [-] \tag{24}$$

in which:
$\theta_{si,min}$ – minimum temperature of the surface under consideration, ;°C
θ_e – calculated outdoor temperature, average monthly dry thermometer temperature, ;°C
θ_i – design internal temperature (Table 10), .°C

In order to check the condition relating to the avoidance of the risk of mould occurrence and growth on the surface of materials, the maximum value of the temperature factor $f_{Rsi,min}$, determined for all twelve months of the year is taken, and the month for which this value has been determined is called the critical month (in Poland, it is usually December, January or February). Calculation results.

1.7. Heat transfer coefficients

a) Floor on the ground

Tab. 14. Comparison of the values of heat transfer coefficients of the floor on the ground in the buildings included in the analysis in the work – before and after thermomodernisation

Lp.	Requirement according to technical conditions 2021	Calculated transmission coefficient U_C		
		6 J. Śniadeckiego St.	12 H. Kołłątaja St.	1 J.U. Niemcewicza St.
	[W/m$^{(2)\cdot K}$].	[W/m$^{(2)\cdot K}$].	[W/m$^{(2)\cdot K}$].	[W/m$^{(2)\cdot K}$].
1	1,20	3,19	3,03	3,23

Source: own elaboration

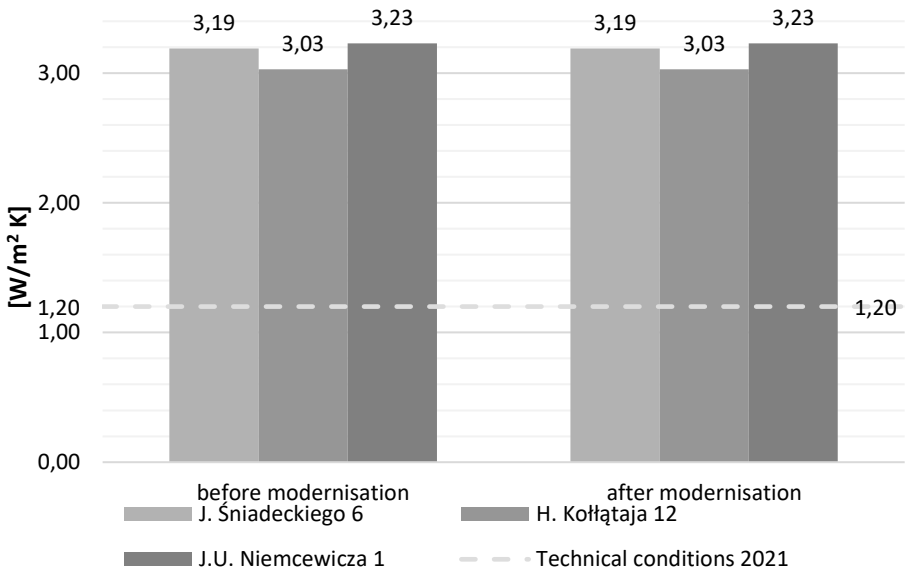

Fig. 4. Comparison of the values of heat transfer coefficients of the floor on the ground in the buildings included in the study – before and after thermomodernisation

Source: own elaboration

b) Basement wall in contact with the ground

Tab. 15. Comparison of the heat transfer coefficients of the basement wall in contact with the ground in the buildings analysed in the study – before and after thermal modernisation

Lp.	Requirement according to technical conditions 2021	Calculated transmission coefficient U_C		
		6 J. Śniadeckiego St.	12 H. Kołłątaja St.	1 J.U. Niemcewicza St.
	[W/m(2)·K].	[W/m(2)·K].	[W/m(2)·K].	[W/m(2)·K].
1	0,45	4,72	3,23	3,23
		0,25	0,39	0,39

Source: own elaboration

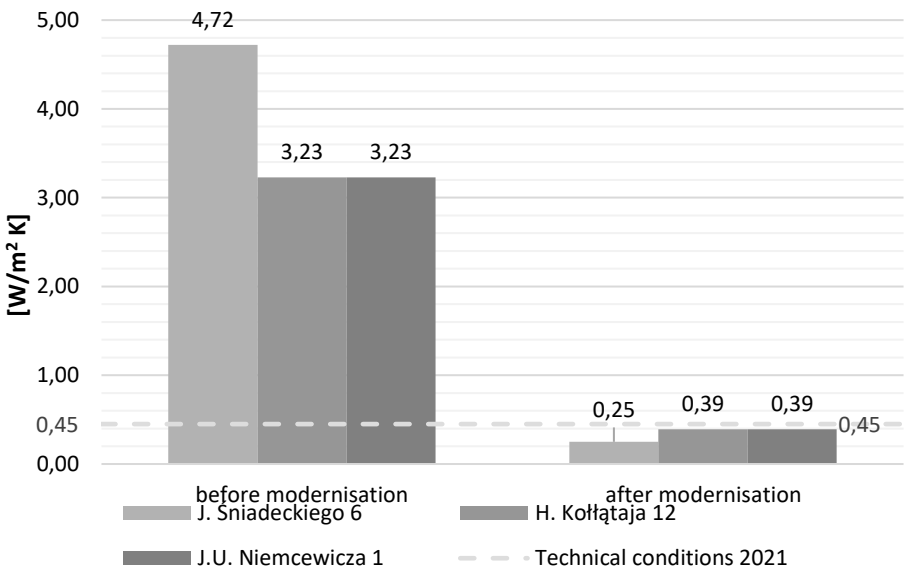

Fig. 5. Comparison of the values of heat transfer coefficients of the basement wall in contact with the ground in the buildings included in the analysis in the study – before and after thermomodernisation

Source: own elaboration

c) Curtain wall

Tab. 16. Comparison of the heat transfer coefficient values of the curtain wall in the buildings included in the analysis in the work – before and after thermomodernisation

Lp.	Requirement according to technical conditions 2021	Calculated transmission coefficient U_C		
		6 J. Śniadeckiego St.	12 H. Kołłątaja St.	1 J.U. Niemcewicza St.
	[W/m$^{(2)\cdot K}$].	[W/m$^{(2)\cdot K}$].	[W/m$^{(2)\cdot K}$].	[W/m$^{(2)\cdot K}$].
1	0,20	0,57	0,44	0,36
		0,24	0,22	0,19

Source: own elaboration

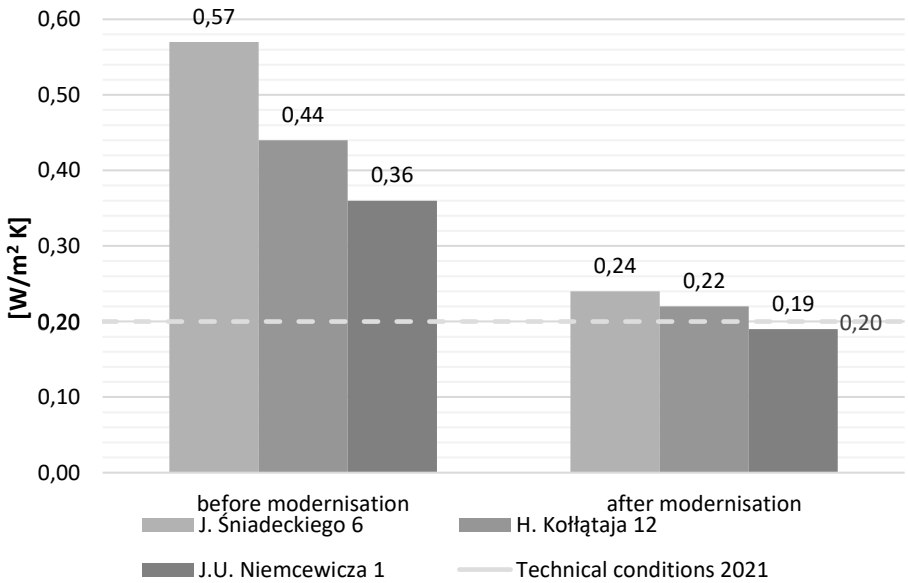

Fig. 6. Comparison of the values of heat transfer coefficients of the curtain wall in the buildings included in the study – before and after thermomodernisation

Source: own elaboration

d) Gable wall

Tab. 17. Comparison of heat transfer coefficients of the gable wall in the buildings included in the analysis in the study – before and after thermomodernisation

Lp.	Requirement according to technical conditions 2021	Calculated transmission coefficient U_C		
		6 J. Śniadeckiego St.	12 H. Kołłątaja St.	1 J.U. Niemcewicza St.
	[W/m(2)·K].	[W/m(2)·K].	[W/m(2)·K].	[W/m(2)·K].
1	0,20	0,56	0,49	0,33
		0,26	0,23	0,19

Source: own elaboration

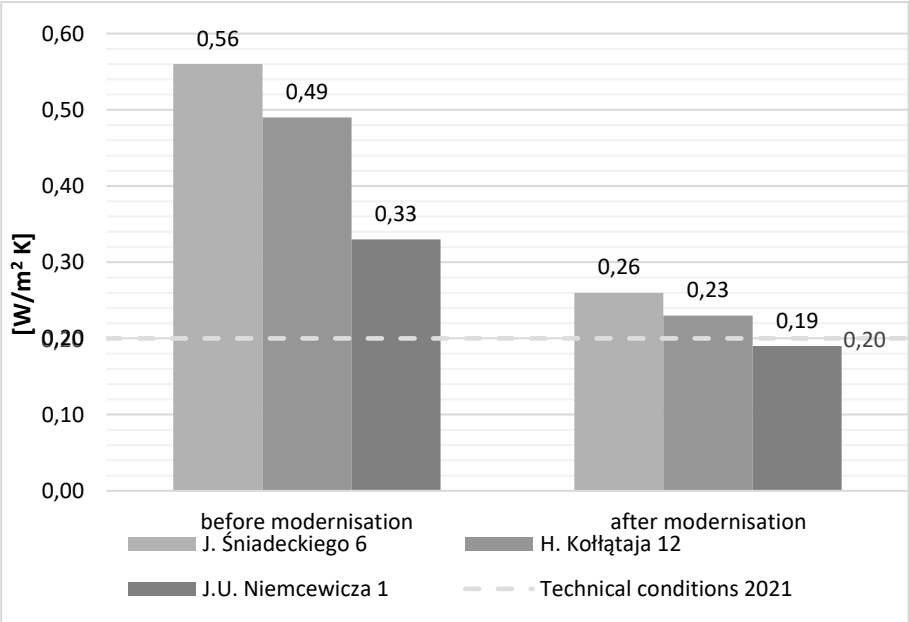

Fig. 7. Comparison of heat transfer coefficients of the gable wall in the buildings analysed in the study – before and after thermomodernisation

Source: own elaboration

e) Ventilated flat roof

Tab.18. List of values of heat transfer coefficients of ventilated flat roofs in the buildings included in the study – before and after thermomodernisation

Lp.	Requirement according to technical conditions 2021	Calculated transmission coefficient U_C		
		6 J. Śniadeckiego St.	12 H. Kołłątaja St.	1 J.U. Niemcewicza St.
	[W/m$^{(2)\cdot K}$].	[W/m$^{(2)\cdot K}$].	[W/m$^{(2)\cdot K}$].	[W/m$^{(2)\cdot K}$].
1	0,15	0,49	0,20	0,18
		0,18	0,20	0,18

Source: own elaboration

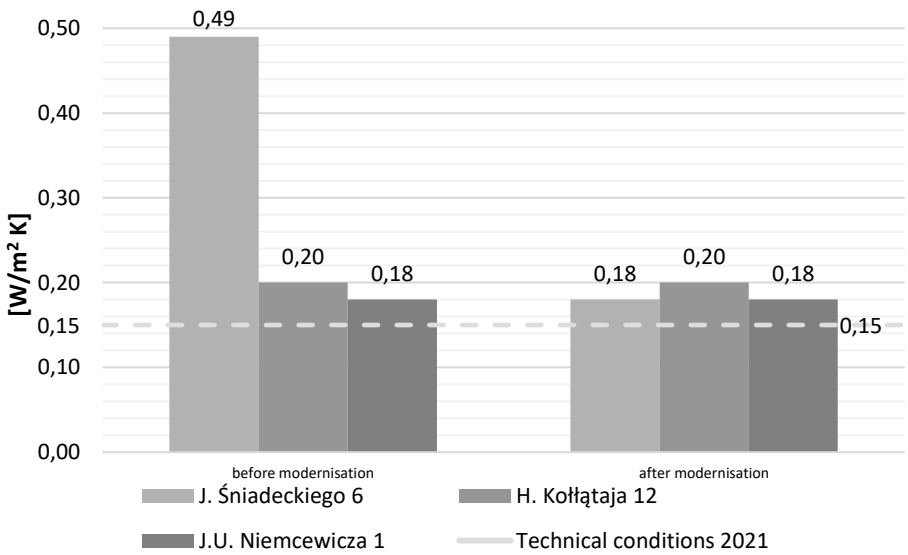

Fig. 8. Comparison of the values of heat transfer coefficients of ventilated flat roofs in the buildings included in the analysis in the study – before and after thermomodernisation

Source: own elaboration

Calculation temperature on the internal surface of the partition

Tab. 19. Values of the design temperature on the internal surface of the curtain wall before and after thermo-modernisation

Lp.	Calculation temperature on the internal surface of the partition		
	6 J. Śniadeckiego St.	12 H. Kołłątaja St.	1 J.U. Niemcewicza St.
	[ºC].	[ºC].	[ºC].
1	16,00	16,91	17,47
2	18,32	18,46	18,67

Source: own elaboration

Tab. 20. Increase in temperature on the internal surface of the envelope resulting from the insulation of the curtain walls in the buildings included in the analysis.

Lp.	The increase in design temperature on the internal the surface of the partition		
	6 J. Śniadeckiego St.	12 H. Kołłątaja St.	1 J.U. Niemcewicza St.
	[ºC].	[ºC].	[ºC].
1	2,32	1,55	1,20

Source: own elaboration

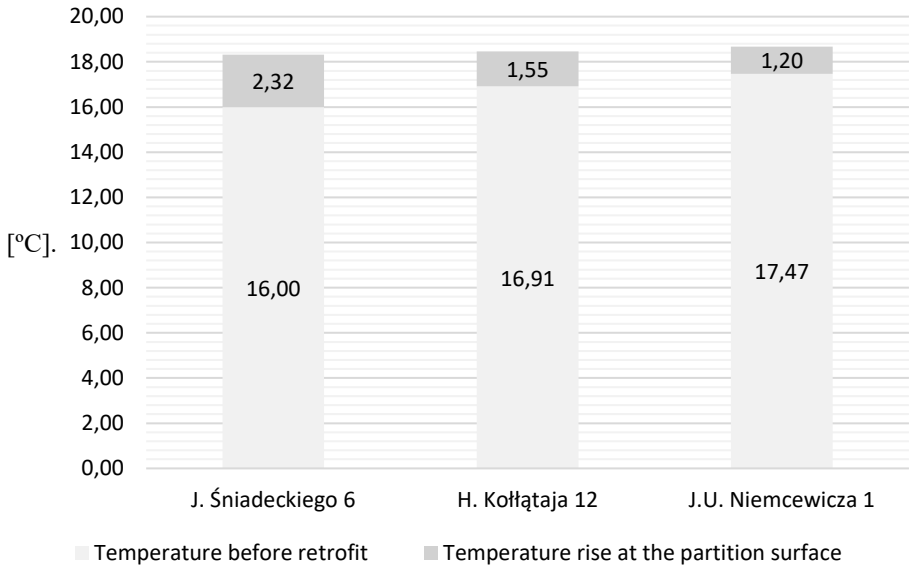

Fig. 9. Increase in the design temperature on the internal surface of the envelope resulting from the insulation of curtain walls in the buildings included in the analysis

Source: own elaboration

1.7.1. Temperature distribution in the vertical section of the partition

Calculations were made for the curtain walls of the analysed buildings in November and December, before and after thermomo-dernisation. Data concerning values of external temperatures (average monthly dry thermometer temperatures) and average monthly relative humidity of the external air in particular months were obtained from the meteorological station located in the fourth climatic zone (city of Białystok) by means of the Purmo OZC Basic 6.7 programme. The following values were assumed:

a) The month of November:

- Internal air temperature: $t_i = 20{,}00℃$,
- Outside air temperature: $t_e = 1{,}60℃$,

b) The month of December:

- Internal air temperature: $t_i = 20{,}00°C$,
- Outside air temperature: $t_e = -1{,}30°C$.

Building at 6 J. Śniadeckiego St.

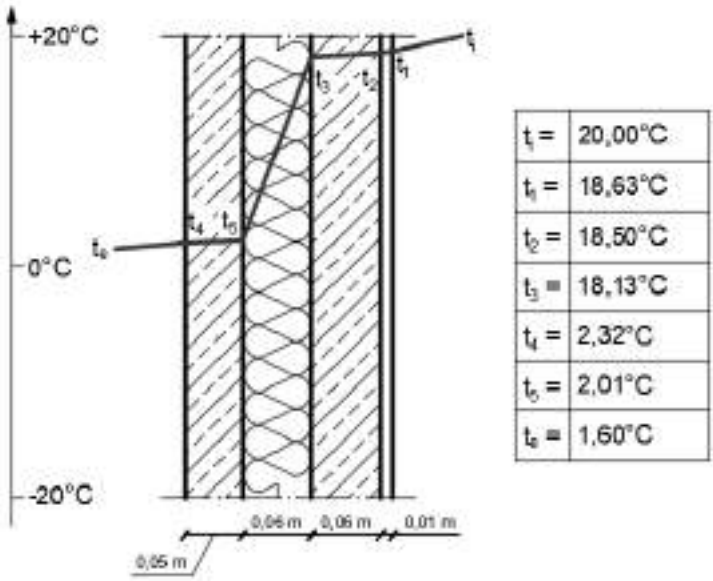

Fig. 10. Temperature distribution in the vertical section of the curtain wall in November in the building at 6 J. Śniadeckiego Street before thermomodernisation

Source: own elaboration

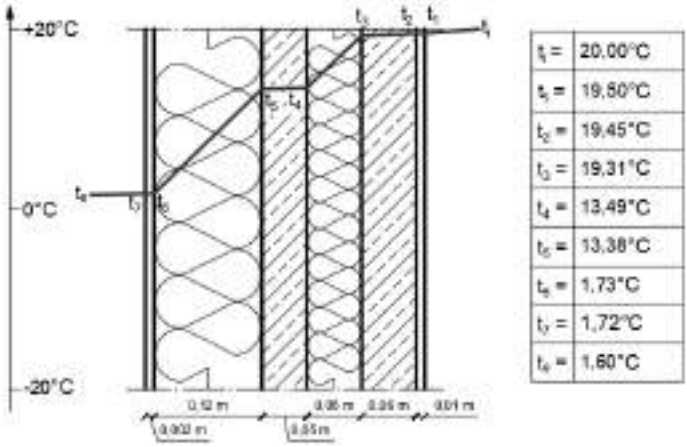

Fig. 11. Temperature distribution in the vertical section of the curtain wall in November in the building at 6 J. Śniadeckiego Street after thermomodernisation

Source: own elaboration

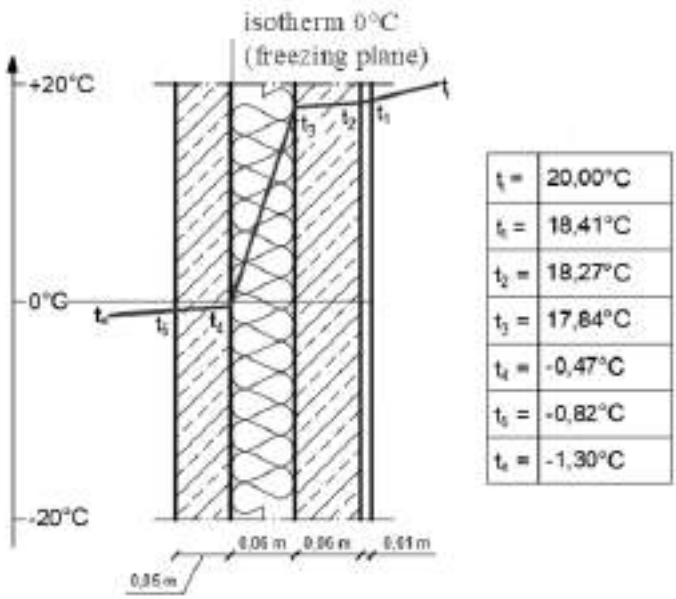

Fig. 12. Temperature distribution in the vertical section of the curtain wall in December in the building at 6 J. Śniadeckiego Street before thermomodernisation

Source: own elaboration

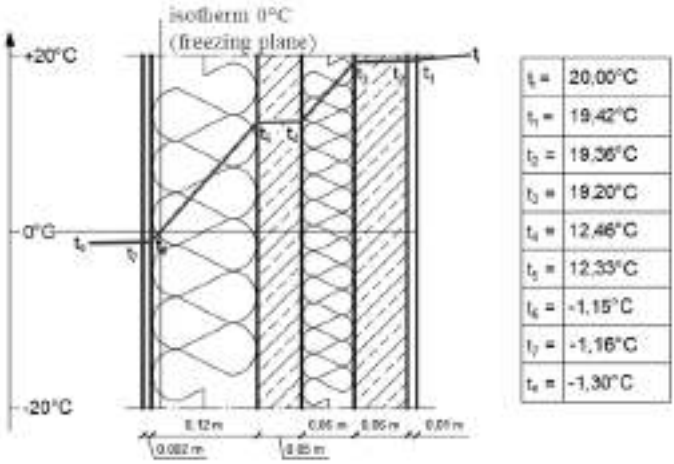

Fig. 13. Temperature distribution in the vertical section of the curtain wall in December in the building at 6 J. Śniadeckiego Street after thermomodernisation

Source: own elaboration

Building at 12 H. Kołłątaja Street

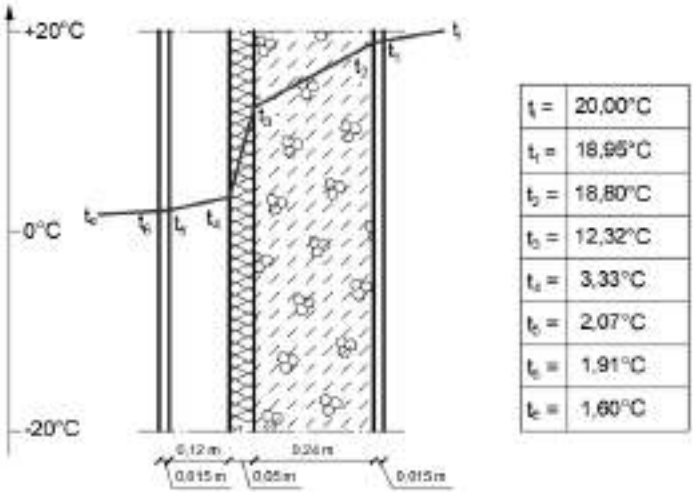

Fig.14. Temperature distribution in the vertical section of the curtain wall in November in the building at 12 H. Kołłątaja Street before thermomodernisation

Source: own elaboration

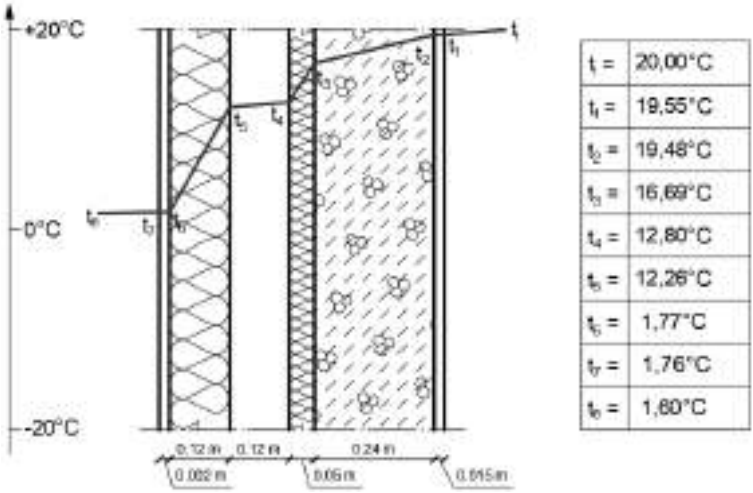

Fig. 15. Temperature distribution in the vertical section of the curtain wall in November in the building at 12 H. Kołłątaja Street after thermomodernisation

Source: own elaboration

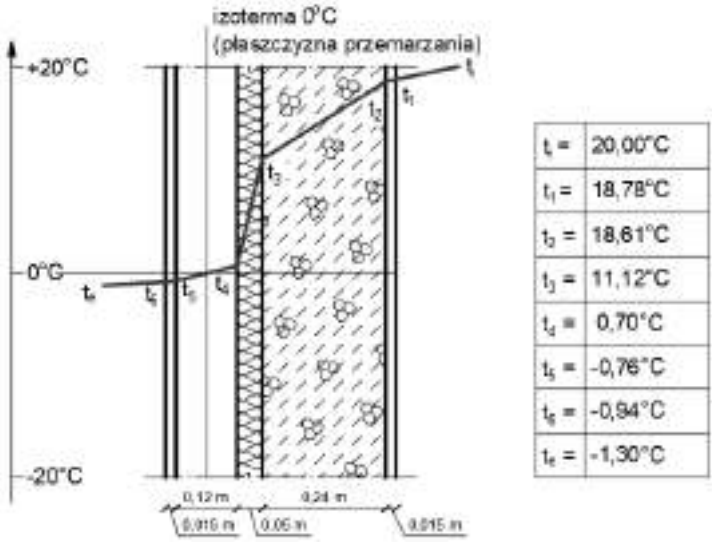

Fig. 16. Temperature distribution in the vertical section of the curtain wall in December in the building at 12 H. Kołłątaja Street before thermomodernisation

Source: own elaboration

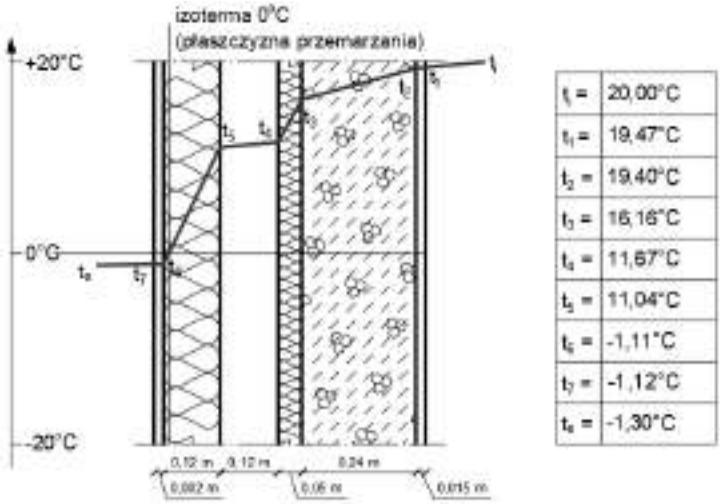

Fig. 17. Temperature distribution in the vertical section of the curtain wall in December in the building at 12 H. Kołłątaja Street after thermomodernisation

Source: own elaboration

The building at 1 J. U. Niemcewicza street

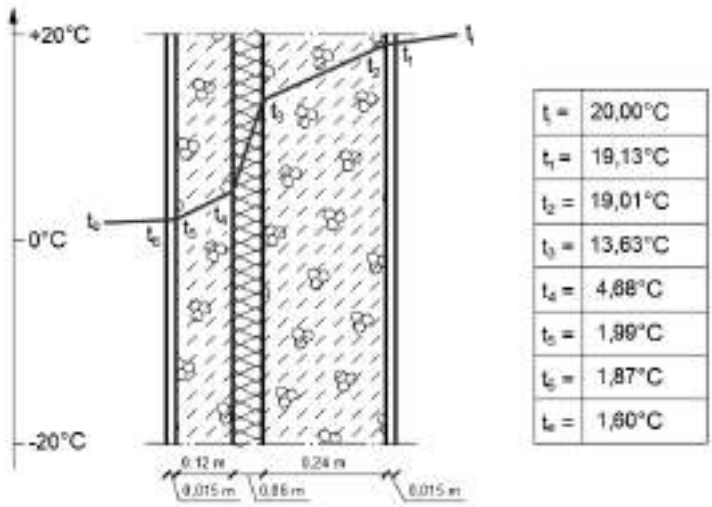

Fig. 18. Temperature distribution in the vertical section of the curtain wall in November in the building at 1 J.U. Niemcewicza Street before thermomodernisation

Source: own elaboration

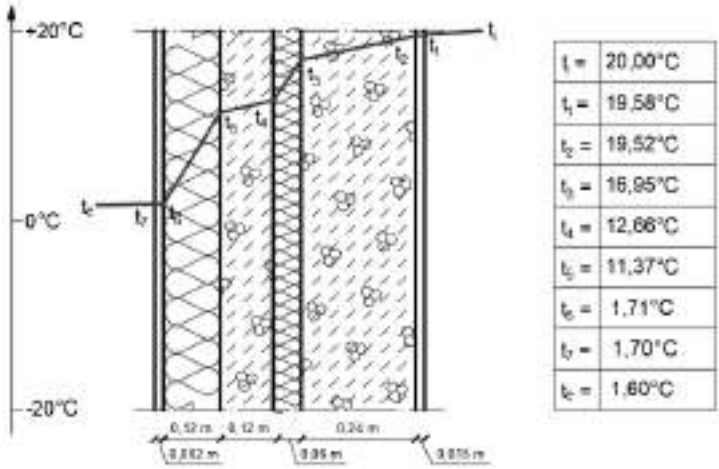

Fig. 19. Temperature distribution in the vertical section of the curtain wall in November in the building at 1 J.U. Niemcewicza Street after thermal modernisation

Source: own elaboration

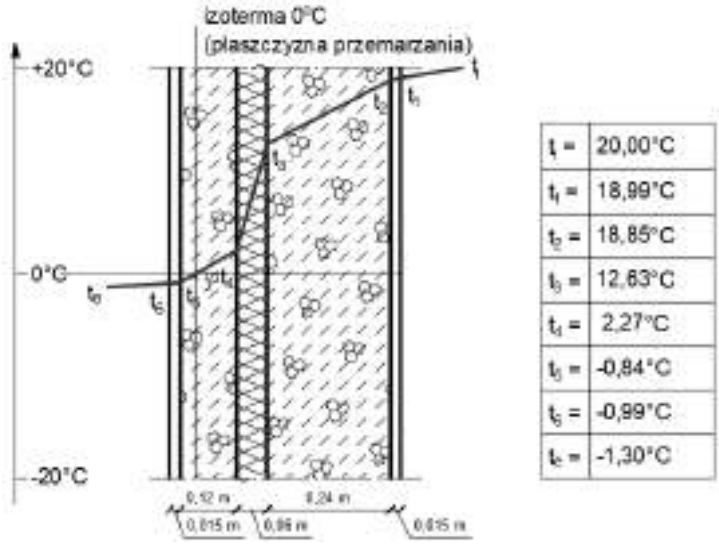

Fig. 20. Temperature distribution in the vertical section of the curtain wall in December in the building at 1 J.U. Niemcewicza Street before thermomodernisation

Source: own elaboration

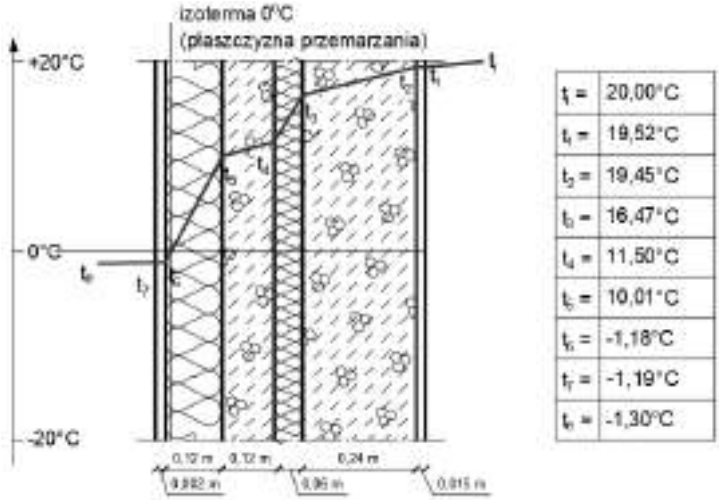

Fig. 21. Temperature distribution in the vertical section of the curtain wall in December in the building at 1 J.U. Niemcewicza Street after thermomodernisation

Source: own elaboration

Determination of the "dew point"

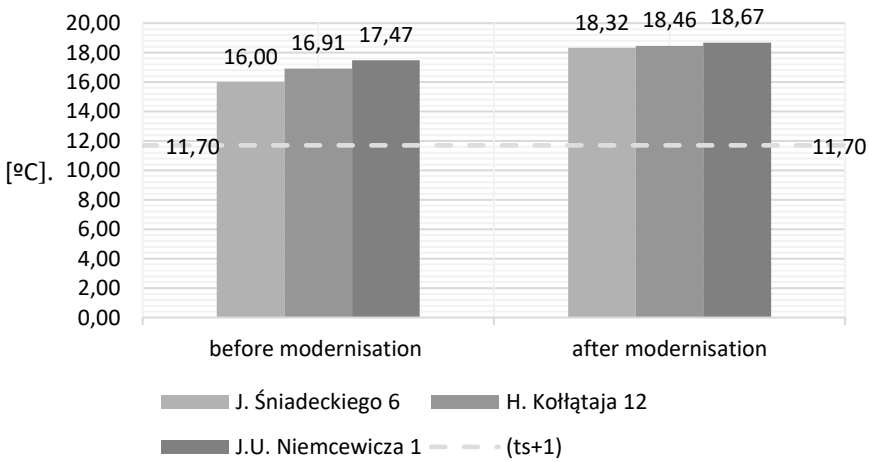

Fig. 22. Values of calculated temperatures on internal surfaces of partitions, related to the "dew point" temperature in the buildings included in the analysis before and after thermomodernisation

Source: own elaboration

1.7.2. Critical surface moisture

The calculations were made for the curtain walls of the analysed buildings before and after thermo-modernisation.

Algorithm for calculating critical surface moisture for the month of January:

Defined:

- Monthly average outside air temperature for January: $\theta_e = -4{,}90°\mathrm{C}$,
- Average monthly outdoor humidity for January: $\varphi_e = 86\%$,
- Design indoor air temperature: $\theta_i = 20°\mathrm{C}$,

In the month of January, the following values were received:

Saturation water vapour pressure of outdoor air from table NA.3 of PN-EN ISO 6946:1999:

$$\theta_e = -4{,}90°\mathrm{C} \Rightarrow p_{sat}(\theta_e) = 405\ Pa$$

Water vapour partial pressure of outside air:

$$p_e = \varphi_e \cdot p_{sat}(\theta_e) = 0{,}86 \cdot 405 = 348\ Pa$$

Excess internal water vapour pressure – interpolation (Fig. 8):

$$\Delta p = 810\ Pa$$

A multiplier of 1.10 was introduced to cover the inaccuracy of the method due to the assumption of a steady state in the calculation:

$$1{,}1\Delta p = 1{,}10 \cdot \Delta p = 1{,}10 \cdot 810 = 891\ Pa$$

Vapour pressure in indoor air:

$$p_i = p_e + 1{,}1\Delta p = 348 + 891 = 1239\ Pa$$

Permissible saturated vapour pressure, taking into account the permissible relative humidity at the surface :$\varphi_{si} = 80\%$

$$p_{sat}(\theta_{si}) = p_i \cdot 0{,}8^{-1} = 1239 \cdot 1{,}25 = 1549\ Pa$$

Minimum permissible surface temperature from table NA.3 of PN-EN ISO 6946:1999:

$$p_{sat}(\theta_{si}) = 1549\ Pa \Rightarrow \theta_{si,min} = 13{,}50°\mathrm{C}$$

Minimum temperature factor:

$$f_{Rsi,min} = \frac{\theta_{si,min} - \theta_e}{\theta_i - \theta_e} = \frac{13{,}5 - (-4{,}90)}{20 - (-4{,}90)} = 0{,}74$$

The results of analogous calculations for the other months of the year are summarised in Table 21.

Tab. 21. Calculation of the minimum temperature factor$f_{Rsi,min}$ for all months of the calendar year – IV climatic zone, meteorological station Białystok

Month	θ_e [C]	φ_e [-]	$p_{sat}(\theta_e)$ [Pa]	p_e [Pa]	Δp [Pa]	$1,1\Delta p$ [Pa]	p_i [Pa]	$p_{sat}(\theta_{si})$ [Pa]	$\theta_{si,min}$ [C]	θ_i [C]	$f_{Rsi,min}$ [-]
I	-4,90	0,86	405	348	810	891	1239	1549	13,50	20,00	0,74
II	-2,00	0,85	517	439	810	891	1330	1663	14,60	20,00	0,75
III	1,70	0,78	691	539	741	815	1354	1693	14,90	20,00	0,72
IV	7,30	0,75	1023	767	515	567	1334	1667	14,60	20,00	0,57
V	13,20	0,71	1518	1078	276	304	1381	1727	15,20	20,00	0,29
VI	15,90	0,77	1806	1391	166	183	1573	1967	17,20	20,00	0,32
VII	17,30	0,76	1976	1502	110	121	1623	2028	17,70	20,00	0,15
VIII	14,50	0,8	1653	1322	223	245	1568	1960	17,20	20,00	0,49

Month	θ_e [C]	φ_e [-]	$p_{sat}(\theta_e)$ [Pa]	p_e [Pa]	Δp [Pa]	$1,1\Delta p$ [Pa]	p_i [Pa]	$p_{sat}(\theta_{si})$ [Pa]	$\theta_{si,min}$ [C]	θ_i [C]	$f_{Rsi,min}$ [-]
IX	12,10	0,83	1413	1173	320	352	1525	1906	16,70	20,00	0,58
X	7,10	0,84	1008	847	523	575	1422	1778	15,60	20,00	0,66
XI	1,60	0,89	687	611	745	820	1431	1789	15,70	20,00	0,77
XII	-1,30	0,89	547	487	810	891	1378	1722	15,10	20,00	0,77

Source: own elaboration

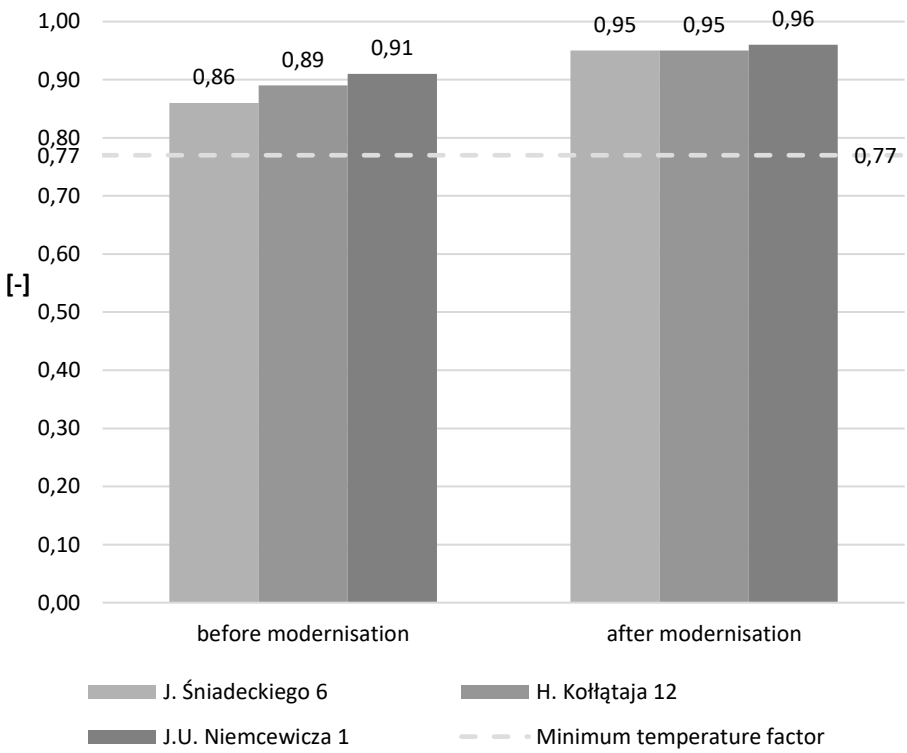

Fig. 23. Values of temperature factors of partitions f_{Rsi} , related to the maximum value of the minimum temperature factor $f_{Rsi,min}$ in the buildings included in the analysis before and after thermomodernisation

Source: own elaboration

1.7.3. Water vapour pressure distribution in a partition

The calculations were made for the curtain walls of the analysed buildings in November and December, before and after thermo-modernisation. These months were selected due to the determined maximum value of the minimum temperature factor. Data concerning values of external temperatures (average monthly dry thermometer temperatures) and average monthly relative humidity of the external air in particular months were obtained from the meteorological station located in the fourth climatic zone (city of Białystok) by means of the Purmo OZC Basic 6.7 programme. The following values were assumed:

a) Month of November

- Internal air temperature: $t_i = 20{,}00°C$,
- Outside air temperature: $t_e = 1{,}60°C$,
- Indoor relative humidity: $\varphi_i = 55\%$,
- Monthly average outdoor relative humidity: $\varphi_e = 89\%$,
- The partial pressures of water vapour in the indoor and external environment (formulae 18 and 19)): $p_i = 1287\ Pa$, $p_e = 610\ Pa$.

b) Month of December

- Internal air temperature: $t_i = 20{,}00°C$,
- Outside air temperature: $t_e = -1{,}30°C$,
- Indoor relative humidity: $\varphi_i = 55\%$,
- Monthly average outdoor relative humidity: $\varphi_e = 89\%$,
- The partial pressures of water vapour in the indoor and external environment (formulae 18 and 19): $p_i = 1287\ Pa$, $p_e = 488\ Pa$

Building at 6 J. Śniadeckiego Street

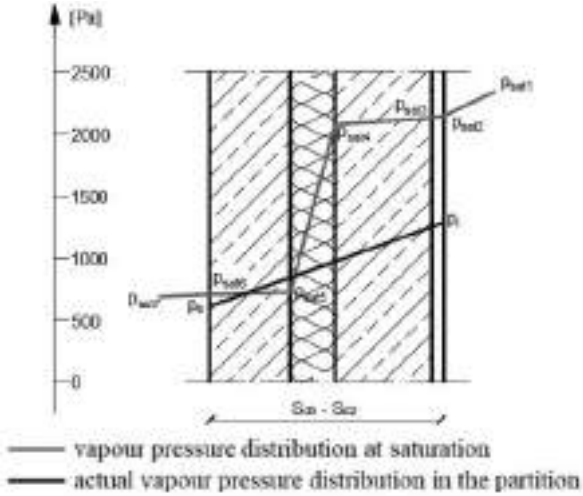

Fig. 24. Distribution of water vapour pressure in the vertical section of the curtain wall in November in the building at 6 J. Śniadeckiego Street before thermomodernisation

Source: own elaboration

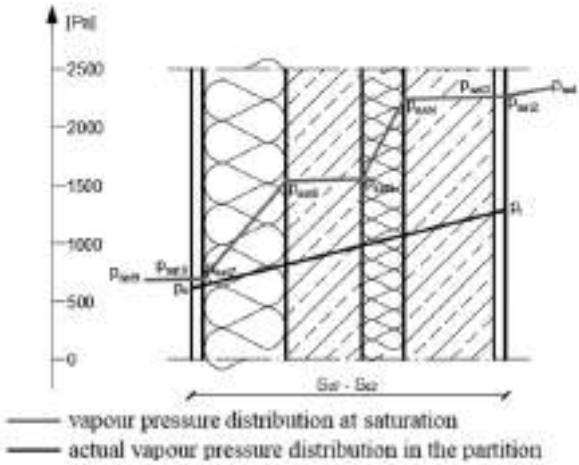

Fig. 25. Distribution of water vapour pressure in the vertical section of the curtain wall in November in the building at 6 J. Śniadeckiego Street after thermomodernisation

Source: own elaboration

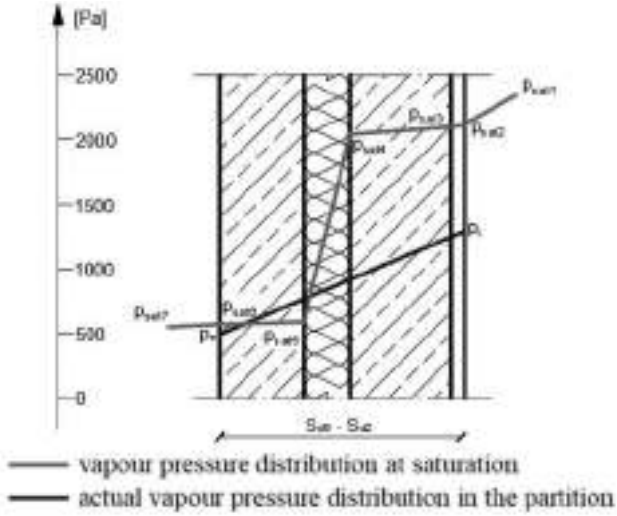

Fig. 26. Distribution of water vapour pressure in the vertical section of the curtain wall in December in the building at 6 J. Śniadeckiego Street before thermomodernisation

Source: own elaboration

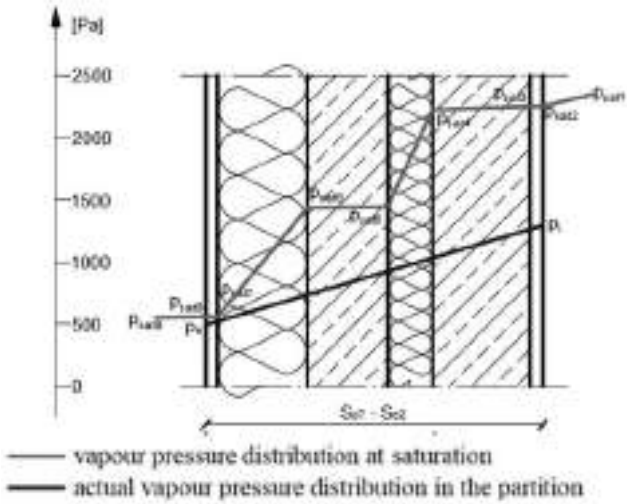

Fig. 27. Distribution of water vapour pressure in the vertical section of the curtain wall in December in the building at 6 J. Śniadeckiego Street after thermomodernisation

Source: own elaboration

Building at 12 H. Kołłątaja Street

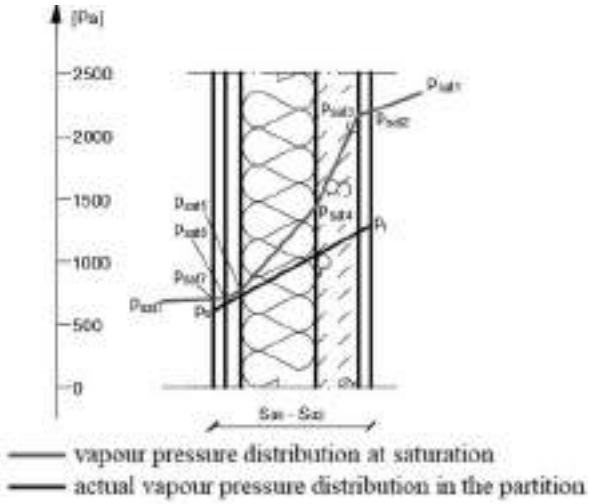

Fig. 28. Distribution of water vapour pressure in the vertical section of the curtain wall in November in the building at 12 H. Kołłątaja Street before thermomodernisation

Source: own elaboration

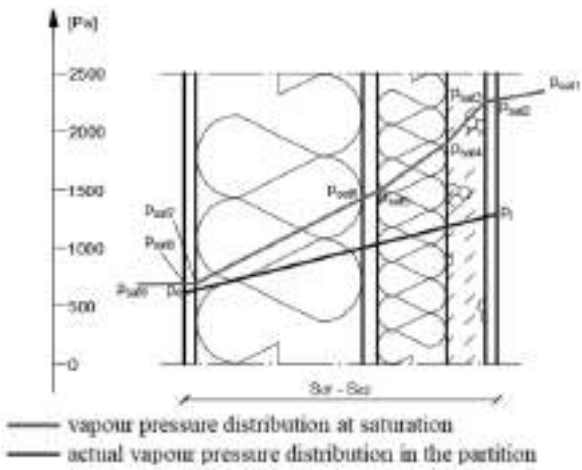

Fig. 29. Distribution of water vapour pressure in the vertical section of the curtain wall in November in the building at 12 H. Kołłątaja Street after thermomodernisation

Source: own elaboration

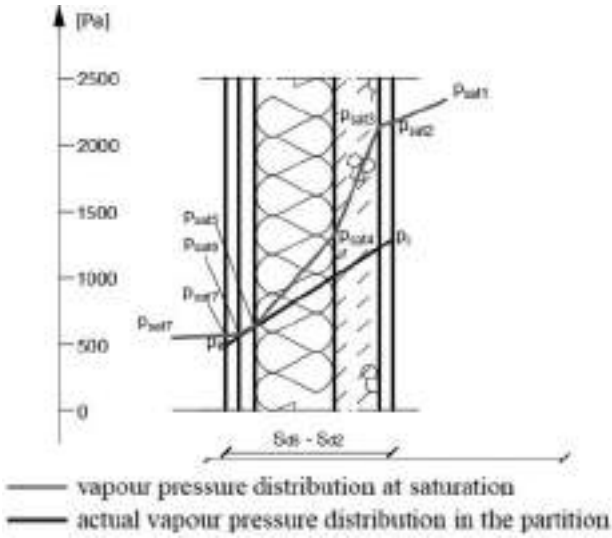

Fig. 30. Distribution of water vapour pressure in the vertical section of the curtain wall in December in the building at 12 H. Kołłątaja Street before thermomodernisation

Source: own elaboration

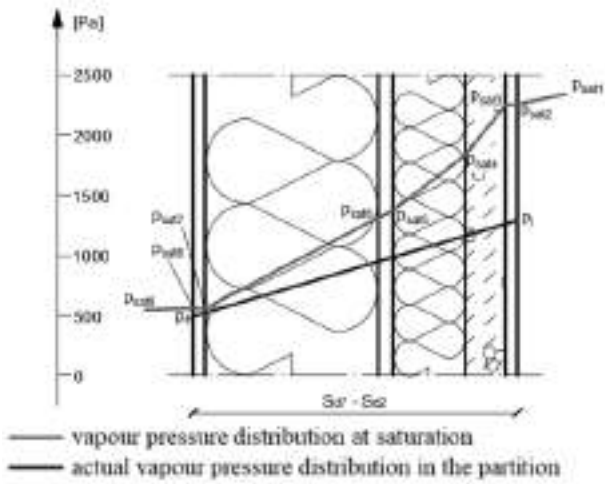

Fig. 31. Distribution of water vapour pressure in the vertical section of the curtain wall in December in the building at 12 H. Kołłątaja Street after thermal modernisation

Source: own elaboration

The building at 1 J. U. Niemcewicza Street

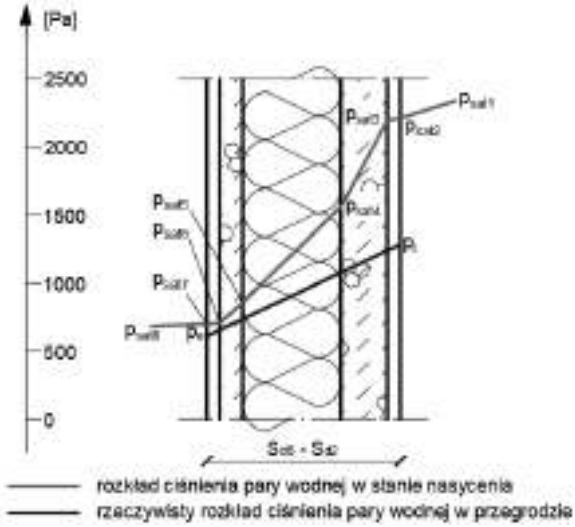

Fig. 32. Distribution of water vapour pressure in the vertical section of the curtain wall in November in the building at 1 J.U. Niemcewicza Street before thermomodernisation

Source: own elaboration

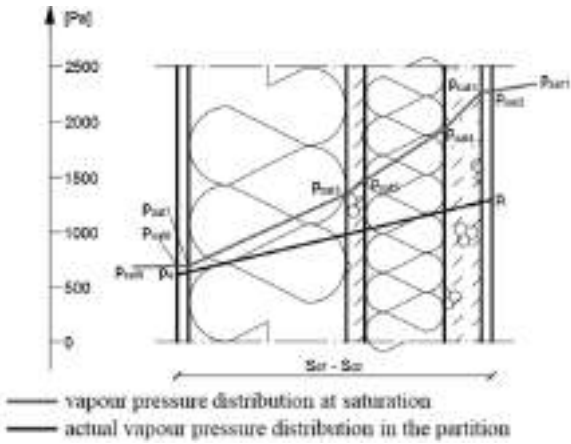

Fig. 33. Distribution of water vapour pressure in the vertical section of the curtain wall in November in the building at 1 J.U. Niemcewicza Street after thermomodernisation

Source: own elaboration

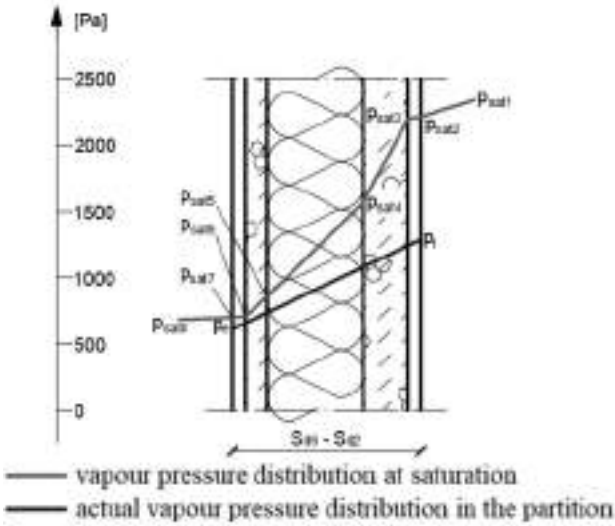

Fig. 34. Distribution of water vapour pressure in the vertical section of the curtain wall in December in the building at 1 J.U. Niemcewicza Street before thermomodernisation

Source: own elaboration

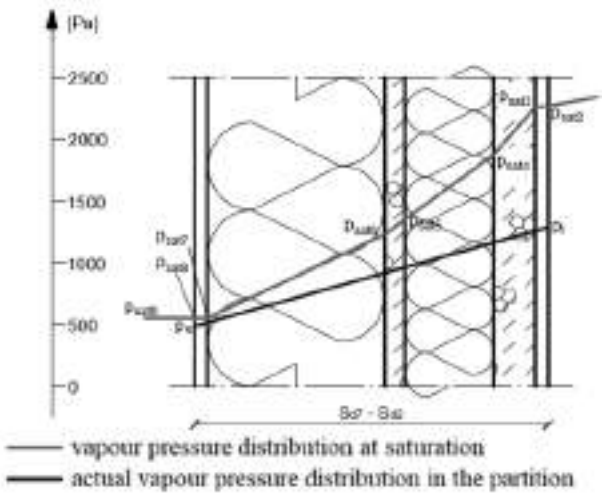

Fig. 35. Distribution of water vapour pressure in the vertical section of the curtain wall in December in the building at J.U. Niemcewicza 1 Street after thermomodernisation

Source: own elaboration

1.7.4. Analysis of thermal energy consumption for central heating

An analysis of thermal energy consumption for central heating has been carried out for the period from the beginning of 2001 to the end of 2019, broken down by year. The data obtained was related to one square metre of heated area of each of the analysed buildings, with the date of thermo-modernisation being highlighted in the graphs.

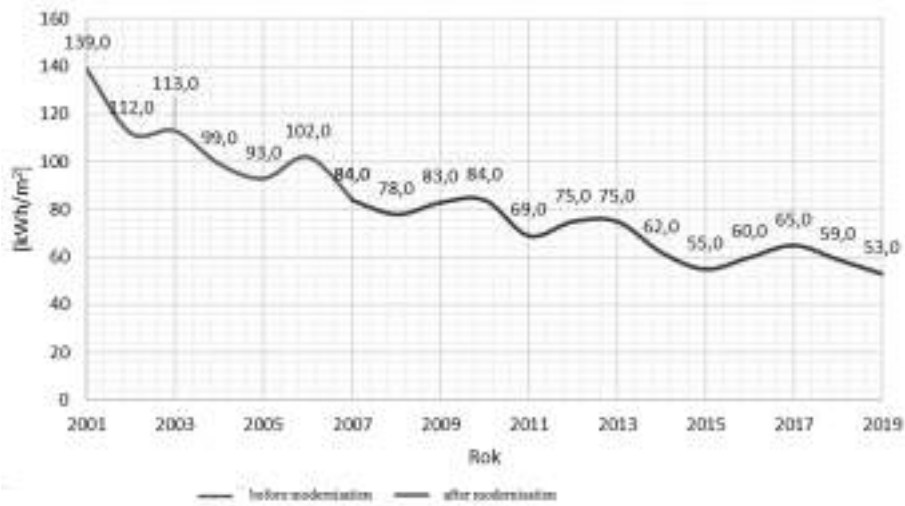

Fig. 36. Thermal energy consumption for central heating in 2001-2019 in the building at 6 J. Śniadeckiego Street.

Source: own elaboration

Average consumption before thermal modernisation: 109.67 kWh/m^2.
Average consumption after thermal modernisation: 69.38 kWh/m^2.

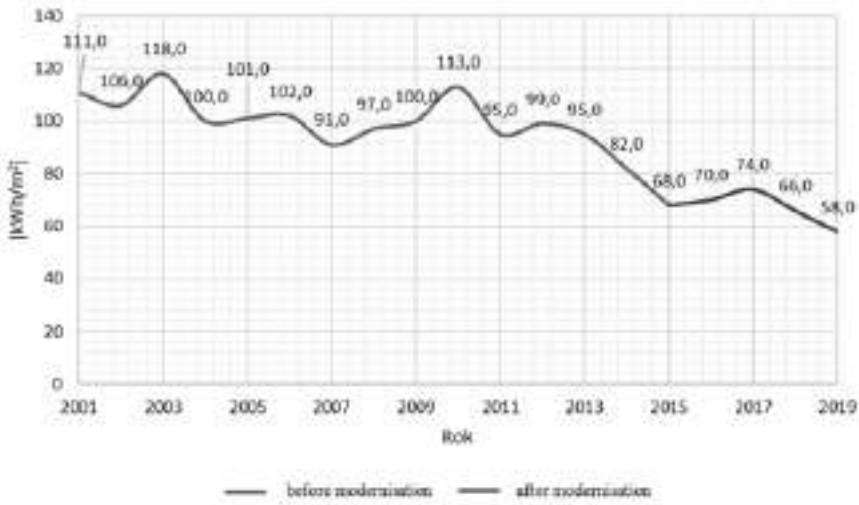

Fig. 37. Thermal energy consumption for central heating in 2001-2019 in the building at 12 H. Kołłątaja Street.

Source: own elaboration

Average consumption before thermal modernisation: 100.71 kWh/m^2.
Average consumption after thermal modernisation: 67.20 kWh/m^2.

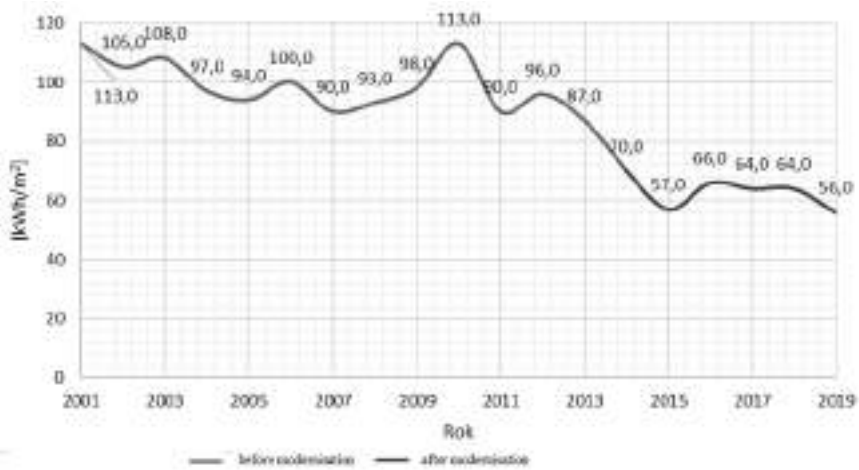

Fig. 38. Thermal energy consumption for central heating in 2001-2019 in the building at 1 J.U. Niemcewicza Street.

Source: own elaboration

Average consumption before thermal modernisation: 98.77 kWh/m^2.
Average consumption after thermal modernisation: 70.00 kWh/m^2.

Comparative overview of the buildings included in the analysis

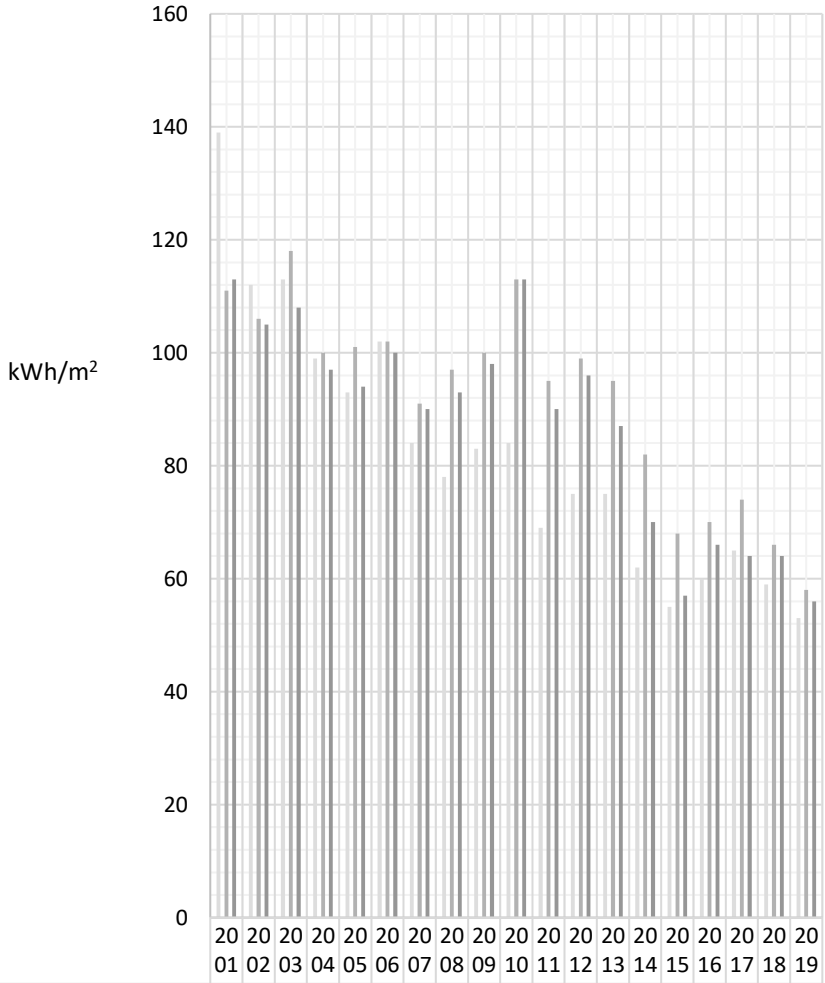

	2001	2002	2003	2004	2005	2006	2007	2008	2009	2010	2011	2012	2013	2014	2015	2016	2017	2018	2019
J. Śniadeckiego 6	13	11	11	99	93	10	84	78	83	84	69	75	75	62	55	60	65	59	53
H. Kołłątaja 12	11	10	11	10	10	10	91	97	10	11	95	99	95	82	68	70	74	66	58
J.U. Niemcewicza 1	11	10	10	97	94	10	90	93	98	11	90	96	87	70	57	66	64	64	56

Fig. 39. Comparative summary of heat energy consumption for central heating in the buildings included in the analysis from 2001 to 2019

Source: own elaboration

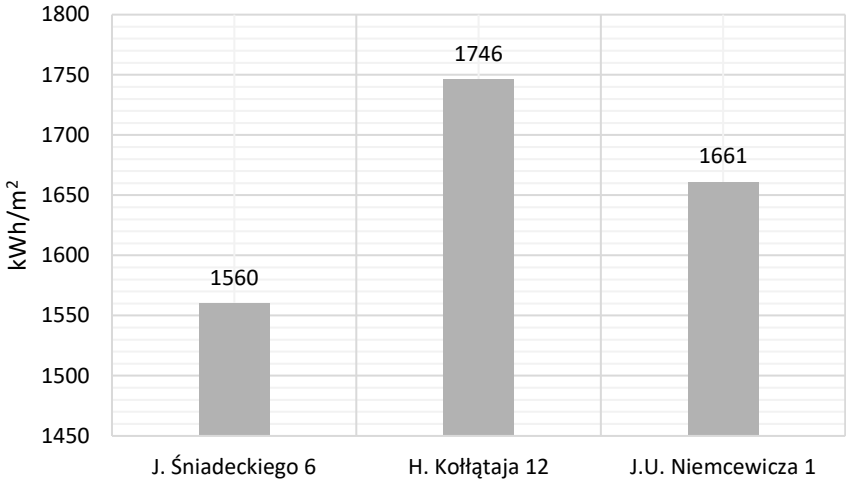

Fig. 40. Total thermal energy consumption for central heating in the buildings included in the analysis from 2001 to 2019

Source: own elaboration

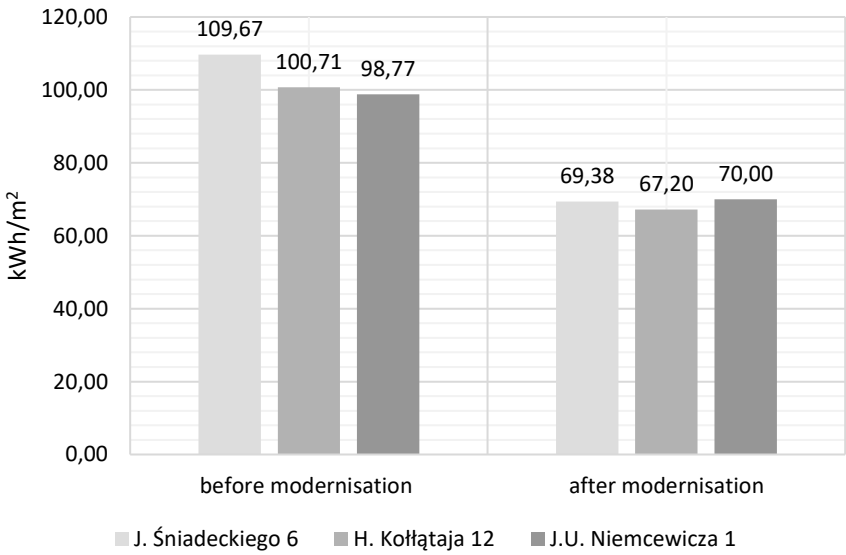

Fig. 41. Average thermal energy consumption for central heating in the buildings included in the analysis in the period 2001-2019 before and after thermomodernisation

Source: own elaboration

1.8. Summary and conclusions

In all buildings covered by the analysis, the **values of heat transfer coefficients** of individual building partitions obtained from the calculations have been referred to the provisions contained in Appendix No. 2 to the Regulation of the Minister of Infrastructure of 12 April 2002 on the technical conditions to be met by buildings and their location and their location. The calculation results for partitions before and after thermomodernisation have been compared with the requirements that have been in force in Poland since January 2021.

The scope of thermo-modernisation works in none of the analysed buildings included insulation of **floors on the ground and flat roofs (except for the building** at 6 J. Śniadeckiego Street)**.** The analysis covered heated basement rooms not intended for permanent human habitation. The results of calculations of heat transfer coefficients for the floors on the ground in all buildings indicate that their construction does not meet the requirements of thermal permeability contained in the regulation. None of the buildings included in the analysis also meet the ordinance's thermal transmittance requirements for the roofs' thermal transmittance. As a result of the insulation of the ventilated flat roof in the building at 6 J. Śniadeckiego Street, a significant decrease in the U_C value was recorded, but this was not sufficient for the flat roof to meet the requirements of the applicable technical conditions.

The calculations show that in none of the analysed buildings, before thermo-modernisation, the thermal transmittance requirement for the basement wall in contact with the ground, curtain walls, and gable walls were met. In the case of basement walls, the thermo-modernisation works proved so successful that, after the works had been carried out, the partitions met the requirements of the technical conditions in force at the time of their execution and met the criteria of the provisions of the regulation that came into force in January 2021. Insulating the curtain walls using the light-wet method had a measurable effect. The U_C coefficient was reduced most effectively for the gable and curtain walls in the building at 1 J.U. Niemcewicza Street, as it is the only one that meets the requirements of the Regulation of the Minister of Infrastructure of 12 April 2002 on the technical conditions to be met by buildings and their location as of today. In the remaining buildings, further modernisation of the walls is required to achieve the required values of heat transfer coefficients.

For all the buildings analysed, the design temperature's value on the partition's internal surface was determined. Calculations were made for curtain walls, assuming the design external temperature for the 4th climatic zone, i.e. $t_e = -22°C$, the design internal air temperature$t_i = 20°C$ and the heat transfer coefficients calculated for the building partition before and after thermo-modernisation. The calculations show that in all the buildings included in the analysis, there was an increase in the calculated temperature on the internal surface of the partition As a result of thermo-modernisation, this demonstrates the validity of the renovation measures undertaken, which directly impact the comfort of living and reduce thermal energy consumption for central heating.

The highest temperature increase on the internal surface of the partition (+2,32°C), resulting from the insulation of the curtain wall, was registered in the building at 6 J. Śniadeckiego Street, made in OWT-67N large-plate technology. This is associated with the most significant reduction in the heat transfer coefficient among the three properties analysed. As a result of thermo-modernisation using the BSO method, this coefficient decreased in value from0,57 to0,24 $W/m^2 \cdot K$, i.e. by 57.89%.

The highest temperature on the surface of a partition after its thermal insulation (+18,67°C) was recorded in the building constructed in the so-called "Żerańska brick" technology, i.e., at 1 J.U. Niemcewicza St. This object, as the latest one to be put into use (1994), was characterised by the best thermal insulation of partitions before their thermal insulation. In this case, the heat transfer coefficient before renovation was 0,36 $W/m^2 \cdot K$, while after - 0,19 $W/m^2 \cdot K$, so there was a decrease of 47.22%. The increase in the calculated temperature on the internal surface of the curtain wall – the smallest among the buildings included in the analysis was .+1,20°C

An analysis of **the temperature distribution in the vertical section of the partitions** was also carried out. The calculations were made for the curtain walls of the analysed buildings in November and December, before and after thermo-modernisation. The data concerning values of external temperatures (mean monthly dry thermometer temperatures) and mean monthly relative humidity of the external air in particular months were obtained from the meteorological station located in the fourth climatic zone (Białystok town), using the Purmo OZC Basic 6.7 programme. Among all the objects included in the analysis, only in the building at 6 J. Śniadeckiego Street were no disturbing phenomena in temperature distribution in the vertical section

of the partition. No concerns were noted in November and December before and after thermo-modernisation.

In the case of the building at 12 H. Kołłątaja St. and also at 1 J.U. Niemcewicza St., in December, before thermomodernisation, the diagram of the temperature distribution in the vertical section of the curtain wall showed the occurrence of zero isotherm, i.e., the frost plane in the external layers of the building partitions. It should be emphasised that the prolonged effect of such a phenomenon on the building material of the wall layer leads to its corrosion and loss of insulating properties.

In the building at 12 H. Kołłątaja St., the curtain wall prior to renovation was a layered wall consisting of 24 cm thick aerated concrete, 5 cm thick expanded polystyrene, and 12 cm thick solid ceramic bricks. Freezing occurred in the layer of solid ceramic bricks. In the building at 1 J.U. Niemcewicza St., the curtain wall before modernisation consisted of a partition wall made of 24 cm thick aerated concrete, 6 cm thick expanded polystyrene and another layer of 12 cm thick aerated concrete. Freezing was registered in the last of the above-mentioned layers. In both of these cases, the freezing of the external layers of the building envelope was eliminated thanks to thermo-modernisation, which consisted of wall insulation using the jointless insulation method. The addition of a 12 cm layer of polystyrene foam shifted the frost plane to the thermal insulation layer.

The analysis has shown that the thermo-modernisation of buildings, which involves, among other things, insulating external walls, not only reduce the consumption of thermal energy for central heating but also improves the thermal protection of buildings. It also plays an essential role in eliminating undesirable phenomena, such as freezing external layers of the building envelope, thereby reducing the risk of its degradation due to adverse weather conditions.

Based on the calculations **to determine** the **"dew point"**, it was concluded that there was no risk of surface condensation in all the buildings analysed, both before and after thermal modernisation. It should be mentioned that the calculated temperatures on the internal surfaces of the partitions and the "dew point" temperature were determined for certain assumed design conditions. It was assumed that the temperature in the rooms t_i was maintained at20℃ and the calculated relative humidity of the airφ_i at 55%. In practice, as a result of incorrect operation of dwellings, caused by the desire to achieve the most significant possible savings by the users of the dwellings, and consisting, among others, in:

- overcooling of rooms,
- clogging of ventilation grilles,
- replacement of windows with airtight windows with no ventilators fitted,

there is a simultaneous drop in temperaturet_i and a significant increase in humidityφ_i . Consequently, this leads to surface condensation on the coolest parts of the building envelope and ultimately, to mould efflorescence. An example of this is the appropriate modelling of the humidity and temperature conditions in the building at 6 J Śniadeckiego Street before thermo-modernisation. In order for the dew point to occur, it is sufficient to lower the temperature in the room to15℃ , while increasing the humidity of the airφ_i to 77%.

Calculated temperature on the internal surface of the partition before thermal upgrading:

$$\vartheta_i = t_i - U_C(t_i - t_e)R_i = 15 - 0{,}57 \cdot \big(15 - (-22)\big) \cdot 0{,}167 = 11{,}48℃$$

Partial pressure of saturated water vapour at design indoor air temperature$t_i = 15℃ \Rightarrow p_{ni} = 17{,}06\ hPa$, (Table NA.3 PN-EN ISO 6946:1999).

Partial pressure of water vapour in the room:

$$p_i = \frac{\varphi_i \cdot p_{ni}}{100} = \frac{77 \cdot 17{,}06}{100} = 13{,}14\ hPa$$

For a given partial pressure of water vapour in the room, the "dew point" temperature was determined t_s, (Table NA.3 PN-EN ISO 6946:1999):

$$p_i = 13{,}14\ hPa \Rightarrow t_s = 11{,}02\ ℃$$

Condition checked:

$$\vartheta_i \geq (t_s + 1)$$

$$11{,}48℃ \leq (11{,}02 + 1) = 12{,}02℃$$

The above example confirms the legitimacy of the provision in § 134(6) of the Regulation of the Minister of Infrastructure of 12 April 2002 on the technical conditions to be met by buildings and their location. This act indicates that heating devices should enable users to obtain a temperature in rooms lower than the calculated one, but not lower than16°C, in rooms with the calculation temperature20°C and higher. In all buildings currently under construction, heating installations are fitted with thermostatic valves to prevent the temperature from falling below 16°C . In existing buildings, out of concern for their technical condition, property managers should consider replacing these valves or the heads when drawing up renovation plans for the coming years.

In order to comprehensively assess the characteristics of the external building envelope of the analysed buildings, **the critical surface humidity was determined** and thus **the possibility of mould growth** on the internal surfaces of the curtain walls was checked. The calculations were carried out in all months of the calendar year, and the result indicated the months of November and December, in which the maximum value of the minimum temperature factor was recorded. No risk of mould growth was identified in any of the buildings included in the analysis, either before or after the retrofit. However, it should be noted that the most minor difference between calculated values of the temperature factor f_{Rsi} and the minimum temperature factor$f_{Rsi,min}$, was recorded in the building at 6 J. Śniadeckiego Street before thermo-modernisation. Renovation works, consisting in insulating the curtain walls, improved the values of the temperature factor by respectively:

- 9.47% – in the building at 6 J. Śniadeckiego Street,
- 6.32% – in the building at 12 H. Kołłątaja Street,
- 5.21% – in the building at 1 J.U. Niemcewicza Street.

As with the calculations to determine the 'dew point', calculations for checking the possibility of mould growth were carried out for fixed internal thermal conditions, assuming a room temperature oft_i at . 20°C

The day-to-day experience of property managers, including the Łomża Housing Cooperative in Łomża, whose buildings were the subject of the work, clearly shows that mould development on internal wall surfaces is all too common, and that the problem is due to inappropriate use of the premises during the operational phase. This phenomenon is linked to the statutorily introduced obligation to account for the consumption of central heating energy within

each property, which entailed the installation of central heating cost allocators in all flats. The exaggerated search for savings by the occupants of the apartments repeatedly leads to excessive cooling of the building envelope, which, in combination with the lack of fresh air inflow (replaced, airtight window frames) and the blocking of the possibility of an outflow of used air by clogging the ventilation grilles, leads to ideal humidity and heat conditions for the development of mould. This situation is confirmed by the annual periodic inspections, consisting of checking the technical condition of, among other things, the chimney flues (smoke, flue and ventilation flues), resulting from Article 62(1)(1)(c) of the Building Law.

In a designed, but also in an operating building envelope, the arrangement of material layers should prevent condensation migrating through the wall between materials in adjacent layers. Calculations of the vapour pressure distribution were carried out to determine the possibility of condensation at the junction of individual layers of the building envelope**.** The calculations were carried out for curtain walls of buildings in November and December, before and after thermo-modernisation. These months were selected in connection with the determined maximum value of the minimum temperature factor. Of the three buildings included in the analysis, no undesirable phenomena were found in two of them, i.e. at 12 H. Kołłątaja Street and 1 J.U. Niemcewicza Street. In the building at ul. 6 J. Śniadeckiego Street in November and December, before thermo-modernisation, there was an intersection of the water vapour pressure curve in the saturated state with the profile of the actual water vapour pressure in the partition. This proves the occurrence in the analysed partition, of water vapour condensation on contact surfaces, between materials of adjacent layers of a multi-layer wall. In the case of the building at 6 J. Śniadeckiego Street, (OWT-67/N technology), condensation occurred between the texture layer made of reinforced concrete and the polystyrene insulation layer in specific thermal and moisture conditions. Such a condition is undesirable, as it leads to the degradation of the concrete when exposed for an extended period and the loss of insulating qualities. However, it also contributes to the corrosion of the hangers that connect the texture layer of the partition with the supporting layer. It is important to note that the renovation work to insulate the curtain wall using the light-wet method, by adding a 12 cm thick polystyrene layer, eliminated interstitial condensation. The phenomenon was eliminated in bot in November and December, proving that thermal insulation also has a positive effect on improving the external characteristics

of the building envelope in terms of eliminating the possibility of migrating condensation at the junction of multi-layer walls.

The expected results of the thermal modernisation works in each building include:

- reduction in thermal energy consumption for central heating,
- a reduction in the cost of supplying heat for central heating,
- improving the thermal protection of the facility,
- improving living comfort by creating a suitable microclimate for occupants of the premises,
- improving the physical properties of the building envelope,
- elimination of undesirable phenomena – freezing, condensation, thermal bridges,
- reducing carbon dioxide emissions into the atmosphere.

One of the most important criteria for assessing the validity and correctness of the thermal insulation work carried out is the **analysis of thermal energy consumption** in the modernised buildings, where the period before and after renovation is assessed. In the case of the buildings included in the analysis, a comparison was made of thermal energy consumption from 2001 to 2019, i.e., the period covering the years before and after thermo-modernisation. In the examined time interval, the lowest thermal energy consumption in relation to 1 m^2 of the heated area was recorded in the building at 6 J. Śniadeckiego Street, i.e. 1560 kWh/m^2. The following buildings consumed respectively: 1661 kWh/$m^{(2)}$ – 1 J.U. Niemcewicza Street and 1746 kWh/$m^{(2)}$ -12 H. Kołłątaja Street. Notably, in all properties, after the thermo-modernisation was carried out, a significant decrease in energy intensity was registered. In the building at 6 J. Śniadeckiego Street, the average thermal energy consumption for central heating before thermo-modernisation was 109.67 kWh/m2, while after – 69.38 kWh/m2, reducing consumption by 37.65%. This is the most significant reduction in energy intensity of the three buildings analysed. The next building, i.e., the building at 12 H. Kołłątaja Street, saw a reduction in average thermal energy consumption from 100.71 to 67.20 kWh/m^2, a reduction of 33.27%, and in the building at 1 J.U. Niemcewicza Street, from 98.77 to 70.00 kWh/m^2, i.e., a reduction in average consumption of 29.13%. Such a significant reduction in thermal energy consumption for central heating in the properties under analysis proves their

thermo-modernisation has met expectations. It should be noted that in the case of Łomża Housing Cooperative, in whose resources the analysed buildings are located, efforts to reduce thermal energy consumption, and thus to reduce the costs of its supply, are carried out in multiple ways. By the decision of the ŁSM Management Board in Łomża, as early as in 1999, specialists were employed whose task has been and still is, to continuously monitor the operation of district heating substations, to continuously cooperate in this respect with the relevant services of the energy supplier, i.e., Miejskie Przedsiębiorstwo Energetyki Cieplnej Sp. z o.o. in Łomża, to continuously analyse the level of heat consumption and to immediately react in the event of any irregularities. This fact is reflected in the decrease in energy consumption since 2001, i.e., the period before thermo-modernisation was carried out in each building.

The whole practical application of the thermal physics of buildings, known as building thermal protection, has been and still is of interest to managers of multi-family buildings and owners of small single-family houses. The worldwide pro-ecological trend, which translates into restrictions in European and national legislation regarding the need to reduce energy consumption, determines the need to look for various solutions. The Łomża Housing Cooperative in Łomża, whose buildings were analysed in this paper, is an example of a manager who carries out its activities in a multi-faceted manner to rationalise property operating costs, particularly thermal energy costs. All buildings subjected to thermo-modernisation are then retrofitted with intelligent thermal energy control systems, where the whole procedure is complemented by constant monitoring of energy consumption levels. Such a comprehensive approach to optimising heat management guarantees the expected financial results while maintaining and even improving living comfort.

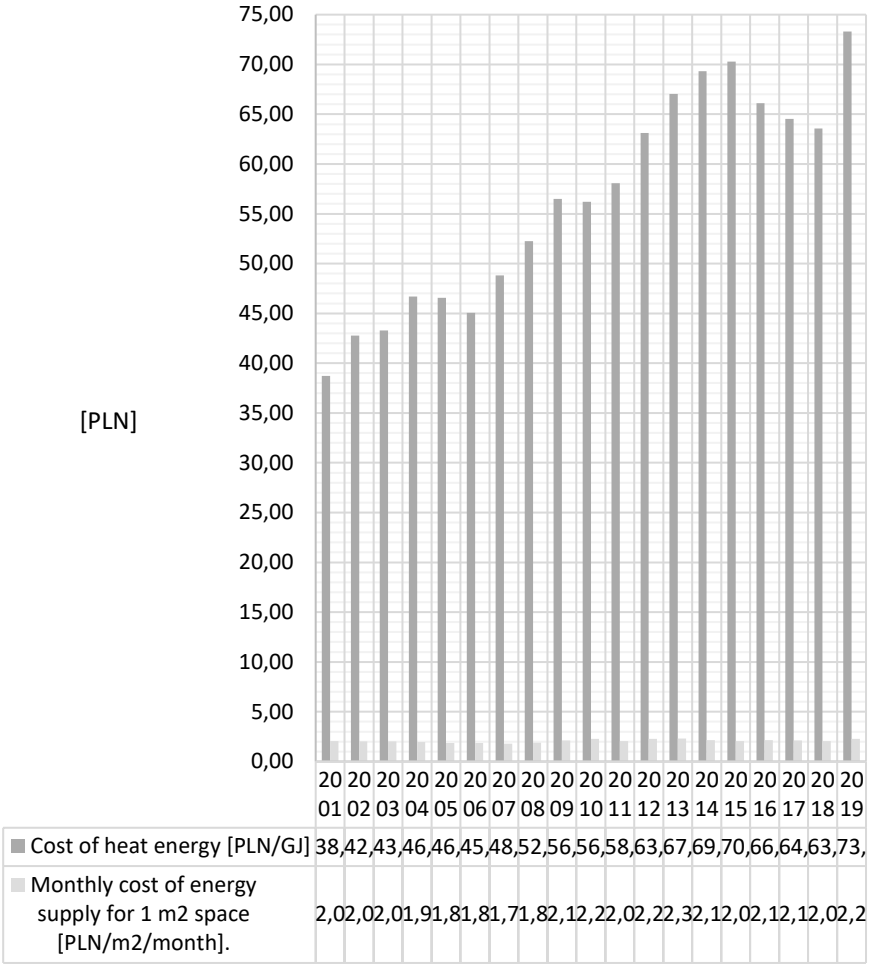

Fig. 42. Comparative comparison of the cost of thermal energy in relation to the monthly cost of energy supply for 1 m^{2}of space in the resources of ŁSM in Łomża in the years 2001-2019

Source: own elaboration

Bibliography

1. Adamczyk-Królak I. "Analiza oszczędności energii cieplnej w budownictwie mieszkaniowym jednorodzinnym." *Budownictwo o zoptymalizowanym potencjale energetycznym* 1.13 (2014): 9-14.
2. Dębowski Jacek. "Cała prawda o budynkach wielkopłytowych." *Przegląd budowlany* 83 (2012): 28-35.
3. Dohojda Marek, Wiśniewski Krzysztof. "Termomodernizacja sposobem rewitalizacji osiedli mieszkaniowych z wielkiej płyty." *Przegląd Budowlany* 90 (2019).
4. Lis Piotr, Sekret Robert. "Efektywność energetyczna budynków-wybrane zagadnienia problemowe." *Rynek energii* 6 (2016): 29-35.
5. Pogorzelski J. "Historia, stan obecny i kierunki przyszłych badań Zakładu Fizyki Cieplnej ITB." *Prace Instytutu Techniki Budowlanej* 30 (2001): 3-14.
6. Szewczyk Agnieszka. "Inteligentne domy–marzeniem mieszkańców miast?." *Zeszyty Naukowe Uniwersytetu Szczecińskiego. Studia Informatica* 29 (2012): 140-141.
7. Wichowski Piotr, Banaszek Stanisław. "Analiza energochłonności oraz kosztów ogrzewania budynku jednorodzinnego w świetle zmieniających się wymagań prawnych." *Acta Scientiarum Polonorum. Architectura* 14.3 (2015).
8. Rozporządzenie Ministra Infrastruktury w sprawie warunków technicznych, jakim powinny odpowiadać budynki i ich usytuowanie (Dz.U. z 2002 r. nr 75, poz. 690 z późniejszymi zmianami)

dr inż. Alena Kisel
https://orcid.org/0009-0000-0310-660X
e-mail: alena.kisel@interia.pl
International Academy of Applied Sciences in Lomza

2. THE ROLE OF CONSTRUCTION IN ACHIEVING SUSTAINABLE DEVELOPMENT GOALS

Abstract

In the study examines the process of achieving the Sustainable Development Goals (SDGs) within an industrial framework, using the construction sector as an example. It highlights key tasks emphasizing the necessity of developing sustainable construction and identifies qualitative directions for advancing construction in the context of the SDGs. These directions are based on enhancing consumer value, promoting environmental friendliness, and implementing a circular economy. The impact of construction activities on the environment is analyzed in detail, with special attention given to the life cycle of construction sites. This stage of construction activity serves as a foundation for analyzing environmental risks and identifying opportunities to apply circular economy principles.

Keywords: construction industry, sustainable development, green construction, energy efficiency of buildings, environmentally sustainable urbanization, rational consumption, circular economy.

2.1. Introduction

In recent years, the concept of sustainable development has become a fundamental ideology for humanity when determining the future of the world. Hák, Janoušková, and Moldan (2016) have argued that transforming global society, environmentand economy to a sustainable one is one of the most uphill tasks confronting man today since it isto be done within the context of the planet's carrying capacity. The World Bank (2017) continuesthat this calls for innovative approaches to managing realities.

In furtherance of this argument, DESA-UN (2018) posits that the ultimate objective of the concept of sustainability, in essence, is toensure appropriate alignment and equilibrium among society, economy and the environment interms of the regenerative capacity of the planet's life-supporting ecosystem (Mensah, 2019). Over the past 20 years, the concept of sustainable development has evolved towards increasing complexity and comprehensiveness.

The concept has moved beyond national models and has transitioned to the regional level. For countries that have achieved high results, further progress has shifted to the level of industries, individual enterprises, or processes. In such cases, strategic goals aimed at sustainable development acquire specific boundaries and require the study of external and internal environments of industries, companies, and processes. Methodologies lose their universality, necessitating their development for each specific example. However, the aspiration to achieve global goals remains constant.

Столкновение с вызовами устойчивого развития в строительном секторе является особенно важно в связи с тем, что тего отрасль перерабатывает огромные объемы массы и Энергетические ресурсы. На практике устойчивое развитиев строительном секторе означает необходимость дальнейшего экономического развитиямent при ограничении потребления материи (энергия и масса) и констрдутья экологически чистых зданий. Рольиз устойчивое строительство в устойчивом развитиимent имеет важное значение из-за:

– важность строительства в развитииобщества, экономики,
– количество потребляемых ресурсов

One of the industries that has significant influence on achieving sustainable goals is construction. Construction production is a source of creating an artificial human habitat. In the process of creating this environment, it actively impacts the natural environment. Unfortunately, this impact is not always favorable.

The challenges of sustainable development in the construction sector are particularly significant due to the industry's utilization of substantial volumes of various resources, including energy. Furthermore, the final product of this industry—real estate objects—also requires the involvement of additional resources during their operational phase to maintain functionality. In practice, sustainable development in the construction sector entails creating conditions that foster continued sustainable development in other industries.

The economic aspect involves reducing operational expenses through the adoption of modern solutions in design, innovative materials, operations, and lowering demolition costs. The environmental aspect focuses on minimizing energy, water, and raw material consumption, as well as reducing greenhouse gas emissions and construction waste. The social aspect is defined by improving the quality of life, with an emphasis on health, comfort (Czajkowska, 2018).

Research Objective: To assess the problem of sustainable development in the construction industry.

Research Tasks: To consider the concept of sustainable development in the context of the modern approach to construction development. Analyze the industry's impact on achieving sustainable development goals. Identify areas for involvement of construction participants and consumers in advancing sustainable development goals.

Research Methodology: Using general methods of scientific knowledge, the goals and tasks of sustainable development, and the activity of the construction industry in implementing them were examined. The study used information publicly available on official UN websites. The author's opinion was formed based on materials presented in publications on sustainable development issues, circular economy in construction, and the author's research results.

2.2. The Impact of Construction Production on Sustainable Development Goals

Industries, organizations, and enterprises that set strategic goals aligned with sustainable development can significantly change their influence on all aspects of society and engage business partners, consumers, and various public groups in this process. In this way, the principle of "Leaving No One Behind" can be understood not only as solving each person's problems but also as everyone's responsibility.

Many authors view construction's influence primarily as interference in the ecosystem (Czajkowska, 2018; Kisel, Sryvkina, 2022; Kisel, Sryvkina, 2023; Kisel, Mikhailova, 2018; Saka, Olanipekun, Omotayo, 2021; Sánchez Cordero, Gómez Melgar, Andújar Márquez, 2019; Szruba, 2021). The human-made habitat inevitably leads to not only ecological discomfort. The modern

approach demands determining the role of the construction industry in achieving all sustainable development goals. It is necessary to identify tasks that the construction industry can tackle to promote sustainability. Industry-specific research is based on already achieved results, available resources, and opportunities during the planning period.

Tab. 1. Setting Tasks for the Construction Industry in the System of Sustainable Development Goals

Sustainable Development Goals (source of logos Sustainable Development Goals https://ourworldindata.org/sdgs)	**Examples of Sustainable Development Tasks in Construction**
 1 No poverty	• Participation in socially-oriented investment projects. • Increase in housing construction volume. • Increase in housing construction with affordable prices or accessible credit programs. • Urban space design with harmonious social infrastructure.
 2 Zero hunger	• Designing and constructing agricultural and food industry facilities to enhance food production and scale effects. • Designing and constructing high-tech crop-growing facilities on low-fertility lands. • Halting the involvement of arable lands in non-agricultural real estate construction.
 3 Good health and well-being	• Adopting new technologies for designing and constructing residential buildings based on green building principles. • Developing new safety technologies for construction processes to reduce injuries. • Reducing harmful factors during construction and operation of buildings. • Using rapid construction technologies for medical facilities with high operational qualities.

Sustainable Development Goals (source of logos Sustainable Development Goals https://ourworldindata.org/sdgs)	**Examples of Sustainable Development Tasks in Construction**
 4 Quality education	• Upskilling workers with knowledge and skills necessary for fostering sustainable development in the construction industry. • Creating clusters with educational institutions supplying specialists for the construction sector. • Participating in forming curricula that include competencies and knowledge in sustainable industry development.
 5 Gender equality	• Adopting and improving reasonable strategies to promote gender equality within the construction sector under the law.
 6 Clean water and sanitation	• Building treatment facilities or applying water purification systems in all construction sites regardless of purpose. • Constructing facilities provided with clean drinking water. • Responsible water resource management during preparation and construction phases.
 7 Affordable and clean energy	• Constructing energy-efficient buildings. • Building facilities with high energy performance. • Constructing buildings using alternative energy sources.

Sustainable Development Goals (source of logos Sustainable Development Goals https://ourworldindata.org/sdgs)	**Examples of Sustainable Development Tasks in Construction**
 8 Decent work and economic growth	• Continuous modernization and innovative development of construction processes. • Increasing industry spending on sustainable research. • Reducing material-intensity in construction. • Ensuring equal conditions for industry workers.
 9 Industry, innovation and infrastructure	• Growth in construction volume. • Implementing and using environmentally safe technologies and production processes. • Increasing investments in innovations. • Incorporating BIM technologies. • Utilizing virtual environments for design and visualization before actual construction.
 10 Reduced inequalities	• Increasing wages in construction through sustainable development for workers at all levels. • Ensuring equality of opportunities and outcomes for all in the construction industry. • Creating inclusive environments for industry employees and consumers. • Implementing standards in design and operation that enhance inclusivity.
 11 Sustainable cities and communities	• Building reliable and safe housing. • Designing and constructing smart cities. • Construction using Breeam and Leed systems. • Reducing ecological pressure on urban environments during construction and operation. • Building environmentally sustainable cities and settlements.

Sustainable Development Goals (source of logos Sustainable Development Goals https://ourworldindata.org/sdgs)	**Examples of Sustainable Development Tasks in Construction**
12 Responsible consumption and production	• Effective protection of natural resources during construction. • Introducing circular economy principles into construction. • Separating construction waste and developing recycling methods. • Certifying management through ISO 14000 systems. • Introducing ISO 59/SC 1 standards.
13 Climate action	• Using construction materials with a lower CO2 consumption index. • Applying operational technologies with CO2 recycling. • Using machinery, equipment, and transport powered by electricity.
14 Life below water	• Reducing pollution of surface waters with construction waste during production stages. • Optimizing water resources usage during construction processes.
15 Peace, justice, and strong institutions	• Using closed technologies for earthworks. • Employing renewable construction materials. • Designing green zones and introducing legislation to increase green zones in urban areas. • Adhering to environmental legislation. • Expanding compensatory planting of greenery.

Sustainable Development Goals (source of logos Sustainable Development Goals https://ourworldindata.org/sdgs)	**Examples of Sustainable Development Tasks in Construction**
 16 Peace, justice, and strong institutions	• Expanding public consultations during construction project implementations. • Ensuring transparency in disseminating results of engineering and environmental surveys. • Introducing open monitoring systems for construction processes accessible to public groups.
 17 Partnerships for the goals	• Tax discipline among construction participants. • Informational and professional support to vulnerable market participants. • Sharing knowledge among partners in sustainable construction. • Partnering in international construction projects. • Establishing internal monitoring systems for achieving sustainable development goals within strategic management of construction companies.

Source: author's own development based

2.3. A Systemic Approach to Achieving Sustainable Development in Construction

The sustainable development goals in construction are achievable when understood as a system of objectives. Therefore, the construction industry must also function as a system. A construction production system is an organizational structure that fulfills its functions in alignment with its intended purpose—in this case, achieving sustainable development.

One principle of forming construction production systems is **integrity**—the dependence of each element and the system's properties on its role within the whole. To ensure the unity of all system elements—connecting them either directly or indirectly—the system must possess certain properties (Figure 1) that allow it to remain balanced, establish adequate work directions, and minimize the impact of disruptive factors. It is important to note that removing

or adding one of the elements generally changes the relationships among the remaining system elements.

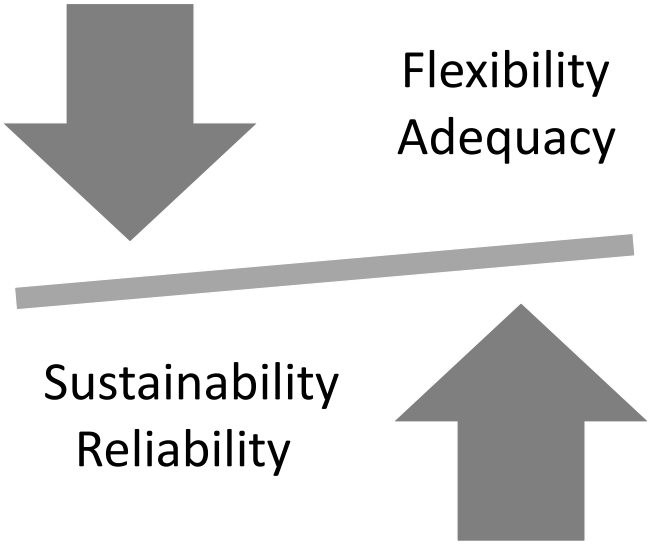

Fig. 1. Properties of Construction Systems Oriented Toward Achieving Sustainable Development Goals

Source: author's own development

Construction systems must meet the following requirements (Kisel, 2013):

- **Flexibility**: Enables constant adaptation to changes in the environment where the system operates.
- **Adequacy**: Reflects real-world problems and facilitates self-assessment in solving sustainable development tasks.
- **Sustainability**: Ensures the ability to withstand factors attempting to disrupt dynamic equilibrium.
- **Reliability**: Allows the execution of planned processes within specified timeframes and with the desired results.

The development of systemic properties is essential because one of the factors disrupting equilibrium is the evolution of the consumer value of construction objects as a product of construction production.

The consumer value of a construction object represents a balance of properties and benefits important to the consumer at a given moment in time and the consumption costs associated with acquisition and operation.

A construction system aligns with sustainable development goals when it can predict changes and prepare for them. Currently, the consumer value of construction objects is changing under the influence of the concept of sustainable development. Successful participants in the construction market are those capable of creating an object with sustainable investment potential, i.e., an advanced level of consumer value.

2.4. Evolution of Consumer Value in Construction Objects as a Product of the Construction Industry

The diversity of construction objects as industry products is determined not only by contractors' capabilities but also by the differentiation of customer and investor needs. Each construction object has a unique set of properties, meeting needs differently and possessing distinct consumer value.

The consumer value of a construction object can be described as a system of requirements outlined within a specific structure, reflecting the demands of customers (investors), which construction companies must satisfy. Influenced by various factors, consumer value is formed at different levels (Table 2). The higher the level, the more clearly consumer value is defined by the system's properties to achieve sustainable development goals. Consumer value is as dynamic as sustainable development itself.

Tab. 2. Levels of Consumer Value in Construction Projects

Basic Level (Physical properties of the object)	Intermediate Level (Minimum conditions for acquisition)	Advanced Level (Aligned with the sustainable development agenda)
Compliance with baseline design decisions	Compliance with design decisions based on progressive ecological standards	Compliance with design decisions based on progressive sustainability standards
Delivery of the object within contractor-specified deadlines	Establishing construction deadlines in accordance with the investment plan of the client	The sale of finished objects or the use of factory-made structures and modules to reduce construction timelines

Basic Level (Physical properties of the object)	**Intermediate Level (Minimum conditions for acquisition)**	**Advanced Level (Aligned with the sustainable development agenda)**
Elimination of construction defects during the warranty period	Absence of construction defects	High-quality standards
Compliance with the national legislation regarding design decisions	Compliance with global quality standards	Compliance with global standards of quality, ecology, and sustainability
Use of standard building materials	Use of building materials with enhanced ecological and thermal properties	Use of materials with low CO2 emissions, recycled content, eco-materials, and biological materials
Construction in areas with developed infrastructure	Construction in environmentally clean areas	Environmentally clean areas equipped with smart city systems
Optimal operational costs	High energy-saving class	Passive structures employing various types of renewable energy
Warranty period of 5 years	Warranty period exceeding 5 years	Warranty period exceeding 5 years with a package of maintenance services

Source: author's own development

The development of consumer value is based on the manifestation of ecological properties in objects, rational resource utilization, and energy efficiency. The implementation of ecological principles in construction is significantly deeper and more complex and should be evident at all stages of product creation and usage.

2.5. Ecological Impact of Construction Production

In the most popular understanding of sustainable development, contractors focus on reducing production waste and minimizing negative environmental impacts during construction. However, this approach yields limited effects, which quickly reach their maximum potential.

Unfortunately, participants in the construction process tend to prioritize short-term, materialistic, and consumer-driven interests. The primary goal remains completing the project on time to ensure profit for each party involved.

As a result, participants are mainly focused on the economic efficiency of the project. For developers, the idea of the project is to secure a source of regular income. The justification for construction often appeals to benefits for the population or industry. Financial indicators remain the primary criterion for determining the feasibility of construction. The utility of the object takes second place, with the local economy being the top priority. Environmental parameters are merely supplementary to the project.

In construction areas, especially industrial zones, there is a high level of air, water, and soil pollution. This occurs at all stages of construction: during design and surveying work, during road and quarry construction, and directly during the execution of major construction works. The main sources of pollution during construction activities include blasting operations, excavation of pits and trenches, the use of hydraulic methods for soil development, deforestation, burning soil in bonfires, soil layer damage, runoff pollution at work sites, the creation of construction waste dumps, and emissions from vehicles and other machinery operating in construction zones (Kisel, Sryvkina, 2022b).

The impacts of construction work on the environment can be both direct and indirect. For example, construction activities directly lead to the destruction of ecosystems at the construction site and the contamination of soil, surface, and groundwater with construction waste. Indirect pollution occurs, for instance, through the choice and use of construction materials.

Tab. 3. Possible Negative Environmental Impacts During Various Types of Construction Work

Types of work	Impacts (environmental issues)
Construction Site Area Planning	Generation of construction waste and contamination of vehicles; pollution of surface runoff; soil erosion; landscape alteration; removal of fertile soil; felling of trees and uprooting of shrubs under the guise of being diseased; disruption of established ecosystems; draining of wetlands; lowering groundwater levels, etc.
Earthworks	Deforestation; disruption of fertile soil during the installation of engineering networks and roadbed preparation; increased noise levels; air pollution; generation and improper storage of soil waste; vegetation destruction; landscape changes.

Waterproofing Work	Contamination of soil and groundwater by waterproofing materials.
Transportation, Loading/Unloading, and Equipment Operations (e.g., compressors, jackhammers, etc.)	Air pollution from exhaust emissions; noise pollution; contamination of existing roads by construction vehicles, etc.
Welding	Emission of harmful substances into the environment; improper disposal of electrodes.
Masonry and Concrete Work	Generation of construction material waste; air dust pollution; residues of materials in the soil due to the lack of removal systems; improper waste disposal or violation of disposal regulations.
Finishing Work	Generation of construction waste; increased air dust and gas pollution; higher noise levels.

Source: Kisel, Mikhailova,2018

The degree of ecological impact also depends on the qualifications of the personnel, their quality and quantity, the quality of project work, materials used for construction, the technology employed in building structures, the technological readiness of the construction industry, the type and quality of construction machines, mechanisms, vehicles, and other factors.

During the execution of work, much depends on how prepared the contractor is to implement design solutions in practice while causing minimal damage to the environment. In implementing the concept of sustainable development, it is not legislative and regulatory organizations that "force" changes but consumers (customers, developers, the state) who create demand for "green" construction products. Sustainable development involves ongoing changes based on balancing the interests of stakeholders in the construction project (Table 4).

Tab. 4. Environmental Needs of Stakeholders at All Stages of the Construction Object Lifecycle

Stakeholders	Needs
Investors	Reducing social and environmental incidents, adherence to corporate environmental ethics, enhanced reputation from eco-project implementation.
Clients (Renters)	Reducing social and environmental incidents, forming a positive image, social business orientation.

Stakeholders	Needs
Contractors	Lowering costs during the construction phase, reducing fines from environmental services, technological maturity in the use of eco-technologies, forming an image for potential clients and investors focused on "green" construction projects.
Future Users of the Construction Object	Comfortable use of the object, eco-friendly solutions for landscaping and greening, integration with the urban environment, reduced operating costs, improved quality of life.
Other Public Groups (Owners and Users of Neighboring Objects, Nature Protection Societies)	Comfort for neighboring objects during construction (reduction of noise, dust, vibration, waste around the site, convenience of passage and transportation) and post-construction. Comfortable living environment, preservation of the natural landscape, maintaining the environment's naturalness.
Environmental Protection Control Services	Compliance with ecological safety requirements, sustainable use of natural resources, waste management practices.
Local Government Bodies	Reduction of social and environmental incidents, lower real estate operating costs, increased energy potential of settlements, comfortable urban environments, development of ecological awareness among the population.
Suppliers of "Green" Technologies and Construction Materials	Increased demand, introduction and development of new technologies.
Ministry of Architecture and Construction	Enhancing the construction industry's image in foreign markets, improving industry production processes, developing "green" construction projects.

Source: Kisel, Sryvkina, 2022b

2.6. The Issue of Complying with Environmental Requirements and Standards in Design and Construction

The challenge of adhering to environmental requirements and regulations in design and construction is a global one. Dodge Data & Analytics surveyed American contractors and design engineers about their use of Green Standards (Rating Systems) over the past five years. The results showed that green tools are still in the early stages of adoption in the civil construction sector, where only a quarter of contractors and about one-third of engineers (31%) have used them in practice. At the same time, 54% of contractors and 47% of engineers

do not use Green Standards (Rating Systems), although they know which ones are applicable to their projects.

The size of the contractor's organization significantly influences the use of Green Standards. One-third of large contractors implement them in their projects, compared to only 16% of small companies. The primary methods of environmental management used were (Dodge Data & Analytics, 2022):

1. Using materials and products with high recycled content;
2. Developing an environmental management plan for construction;
3. Using permeable pavement for streets;
4. Conducting lifecycle cost analysis;
5. Calculating the energy or carbon footprint of a project;
6. Performing environmental impact assessments.

Sustainable resource use is still a new practice for construction, as less than 50% of contractors adopt the listed methods. Waste management, the use of materials with high recycled content, and permeable pavements are the most widely used methods by contractors and engineers, often exceeding client requirements. While less than half of engineers employ these environmental methods overall, the fact that they do so more often than clients demand reflects their voluntary commitment to making projects more sustainable.

This commitment is driven by the advantages demonstrated by completed projects.

Tab. 5. Advantages of Using Sustainable Development Methods in Construction

Economic	Technical	Social
Reduced operating costs	Documentation (certification) ensuring quality assurance	Improved health and well-being of users (residents)
Creation of future-oriented assets	Multiple design solutions	Educating users (residents) on sustainable development
Increased market value of assets	Improved labor productivity	Enhanced social status when choosing sustainable projects

Economic	Technical	Social
Higher rental rates and occupancy rates for commercial properties	Technological maturity of contractors with experience in "sustainable techniques and technologies"	Improved reputation and development of sustainable corporate culture

Source: author's own development

The most destructive processes for the environment are often associated with the system of works aimed at organizing the construction site area. The concept of sustainable development is reflected through the creation of sustainable (eco-friendly) solutions that minimize negative environmental, economic, and social consequences during the construction period (Table 6).

Tab. 6. Minimization of Environmental Impact Across the Stages of a Construction Site's Lifecycle

Stage	Approaches to Minimizing Environmental Impact
Construction Site Design	Analysis of geographical and biological conditions for construction; development of alternative options for creating engineering infrastructure (networks, roads); use of alternative energy sources for construction needs; improvement of supply chains for construction materials and other resources to the construction zone.
Deployment of the Construction Site	Construction of roads within the site with minimal noise impact on existing structures; installation of networks using closed methods; organization of wheel cleaning stations; preservation of fertile soil and green spaces; creation of temporary roads with surfaces that reduce soil erosion.
Operation of the Construction Site During Work	Proper sorting of construction waste, its disposal and recycling; adherence to storage rules for construction materials; rational use of time for operating construction equipment and machinery to reduce fuel consumption, vibration, and noise.
Decommissioning of the Construction Site	Use of mobile temporary buildings for workers; control over construction material stock in the final phase of construction; restoration and cleaning of the site; analysis and repair of damages (e.g., tree damage, soil subsidence, road surface issues).

Stage	Approaches to Minimizing Environmental Impact
Landscaping and Integration of the Completed Object into the Surrounding Environment	Greening of territories, including compensatory landscaping.
Object Handover Process	Evaluation of the implemented environmental impact mitigation measures.
Operation of Areas Adjacent to the Object	Addressing environmental incidents identified during the warranty period.

Source: Kisel, Sryvkina, 2022a

Sustainable ecological development is based on principles (Figure 2):

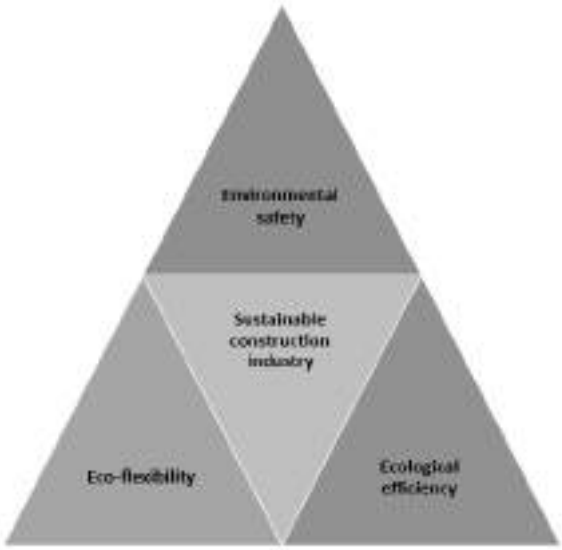

Fig. 2. Principles of Environmentally Sustainable Construction

Source: author's own development based on (Kisel, Sryvkina 2023)

Environmental safety ensures compliance with the conditions of the surrounding natural and social environment, guaranteeing ecosystem stability during the construction and operational phases of the object. **Environmental flexibility** refers to the ability of the construction process to adapt to frequently changing environmental conditions on-site, respond to shifts in regulatory, organizational, technological, and resource indicators, and achieve

project goals. **Environmental efficiency** in the organization of construction production ensures the necessary parameters of quality, resource conservation, and the achievement of social and environmental benefits (Kisel, Sryvkina 2023).

The highest level of efficiency in all construction processes corresponding to sustainable development is achieved through the implementation of a circular economy.

2.7. The Circular Economy in Construction as a Condition for Achieving Sustainable Development

A circular economy is a regenerative economic system that minimizes resource usage, waste, emissions, and energy losses by creating closed-loop processes, where the waste from one process is used as raw material for another, unlike a linear economy.

The effectiveness of implementing such a system depends on fully covering all stages of construction project development. The implementation of these ideas is already reflected in regulations, established practices for managing construction projects and individual processes, as well as in researchers' works (Benachio, G. L. F., Freitas, M. D. C. D., & Tavares, S. F. (2020), Obolewicz J. (2022), 14. Swarnakar, Vikas & Khalfan, Malik. (2024), Szruba, M. (2021)).

Participants in the construction industry choose the most organizationally accessible options. Let us consider the practical experience of such an implementation using the example of preparing a construction site for work production. Above, the author presented an analysis of the potential impact of the construction site on the environment throughout its lifecycle stages.

Sufficient experience has been accumulated in global practice, there is a similar regulatory framework, and a common understanding of the significance of organizational and technological processes, both for construction results and for sustainable development goals.

A construction site is a territory where the initial stage of preparation for fulfilling the construction task is carried out. It includes the placement of machinery and technical equipment, storage areas for building materials and structures, roads for vehicles and pedestrians, networks, pipelines, and channels, as well as administrative facilities, premises, and equipment, in accordance with norms, rules, technical knowledge, and expertise. The construction site's layout is determined by the “Construction Site Layout Plan”,

which defines the placement of auxiliary buildings and equipment concerning the objects being constructed. Legislation in the field of designing the "Construction Site Layout Plan" is constantly being updated and is becoming increasingly aligned with the requirements for:

- Environmental safety,
- Occupational health and safety,
- Preservation of all types of resources,
- Ensuring comfort for surrounding objects,
- Workplace hygiene,
- Fire safety,
- Compliance with territorial development plans.

Using the example of decisions made during the design of the site layout plan, let us explore the possibilities for implementing a circular economy.

Tab. 7. Directions for Implementing Circular Economy Practices in the Process of Designing the "Construction Site Layout Plan"

Process	Resource	Applied Technology	Usage Options	Circular Economy Effect
Removal of fertile soil layer	Fertile soil	Storage	Use in landscaping	Reduction in natural resource loss, saving on transportation costs
		Transport and cleaning	Use in landscaping at other sites	
Leveling the construction site, digging pits and trenches	Excess soil	Storage	Use for filling in subsequent works	Reduction in natural resource loss, saving on transportation costs
		Transport	Use for various needs at other sites	Reduction in natural resource loss

Process	Resource	Applied Technology	Usage Options	Circular Economy Effect
Handling existing vegetation (trees and shrubs)	Trees and shrubs	Protection	Use in landscape design for the project	Reduction in natural resource loss, savings on seedling acquisition costs
		Digging and transplantation	Use in landscape design for the project or other projects	Reduction in natural resource loss, saving on transportation costs
		Cutting	Processing into mulch	Optimization of natural resources, savings on landscaping costs
Handling existing buildings and structures on the construction site	Buildings, pavement	Preservation, disassembly	Use in structures for newly constructed buildings, temporary purposes (warehouse, utility object)	Cost optimization for construction and site maintenance
		Demolition, crushing of building materials	Filling for temporary roads within the construction site	Cost optimization for site maintenance
			Filling for temporary roads at other sites	Reduction in resource loss
			Processing, sorting of construction waste	Recycling

Process	Resource	Applied Technology	Usage Options	Circular Economy Effect
Construction of roads and access points on the site		Analysis of placement options, length optimization	Placement in locations of planned roads	Use as a preparator y layer for planned roads, reduction in road construction costs
Provision of sanitary facilities for workers	Mobile inventory buildings	Repeated use, current repairs	Use as intended	Cost optimization, recycling
Lighting of the construc tion site	Solar energy	Solar-powered lamps	Use as intended	Cost optimization for lighting
Construction of warehouses and open storage areas	Resource demand schedules during construction and source information	Specialized software for logistics task solving	Supply chain optimization	Optimization of warehouse sizes and their arrangement costs
Storage of construction materials and equipment	Databases, production experience related to placement analysis of warehouses within the constructio n site relative to installation mechanisms and unloading areas	Information analysis	Optimization of installation equipment parking, use of "wheel-mounted installation"	Optimization of warehouse spaces and handling of construction materials; work-time optimization and risk reduction for material losses and damage
Construction of a site for separate collection of constructio n waste	Construction waste	Waste separation by hazard classes	Disposal of hazardous waste	Environmental protection
		Separation of waste by purpose	Transfer of waste to specialized recycling stations	Recycling

Source: author's own development

The conducted analysis indicates that in construction, it is necessary to search for and analyze opportunities to implement a circular economy at every stage of the creation and operation of a construction object. A circular economy in construction creates conditions for rethinking material and waste management to pro

mote sustainable construction methods.

2.8. Conclusions

1. The study confirmed the relevance of the concept of sustainable development and the development of a mechanism to monitor its achievement in terms of objectives.
2. The need to study industry-specific characteristics, where the problem of sustainable development takes on new dimensions, has been identified. The construction sector is presented as one of the most significant for the proposed research direction.
3. The construction industry makes a significant contribution to the economies of nations, necessitating the identification of industry tasks to achieve all sustainable development goals.
4. The analysis showed that the construction industry is capable of solving a number of tasks unique to it to achieve each sustainable development goal.
5. The complexity of processes aimed at achieving sustainable development goals in construction dictates the need to consider it as a system with specific properties. These properties will allow maintaining balance during sustainable development and performing the inherent functions of the construction system.
6. The choice of directions and spheres of sustainable development is determined by the evolution of the consumer value of construction objects.
7. The analysis of consumer value highlighted environmental potential as themain direction ensuring the industry's sustainable development.
8. Studying the negative impacts of construction activities on the environment and the environmental needs of stakeholders will enable the development of the industry on a new qualitative level. The development of eco-construction can become a source of economic growth.

9. The analysis of global experience confirms that the introduction of sustainable technologies can achieve economic, technical, and social benefits.
10. Implementing the principles of a circular economy in the construction industry can bring significant environmental and economic benefits. By reusing and recycling materials, reducing waste, and applying sustainable design methods, the construction industry can become more resource-efficient and less dependent on non-renewable resources.
11. Since the processes related to organizing the construction site area are often perceived as the most destructive for the environment, this stage of construction activity became the basis for analyzing environmental risks and identifying reserves for applying the circular economy.
12. Achieving sustainable development goals in construction is a process necessary to maintain balance between natural, social, and industrial environments and to preserve comfortable conditions for meeting the needs of future generations.

Bibliography

1. Benachio, G. L. F., Freitas, M. D. C. D.,Tavares, S. F. (2020). Circular economy in the construction industry: A systematic literature review. Journal of cleaner production, 260, 121046.
2. Dlouhy, J., Wans, S.,Haghsheno, S. (2018). Evaluation of Customer Value by Building Owners in the Construction Process. 26th Annual Conference of the International Group for Lean Construction,199–208. DOI: https://doi.org/10.24928/2018/0393
3. Czajkowska, A. (2018). The role of sustainable construction in sustainable development. MATEC Web Conf., 174 (2018) 01027. DOI: https://doi.org/10.1051/matecconf/201817401027
4. Outlook for Civil Construction in 2022 Dodge Data & Analytics. 2022. Issue 1, 39 s.
5. Chethana Illankoon, Sadith Chinthaka Vithanage (2023). Closing the loop in the construction industry: A systematic literature review on the development of circular economy. Journal of Building Engineering,Volume 76. DOI: https://doi.org/10.1016/j.jobe.2023.107362.

6. Hák, T, Janoušková, S., Moldan, B. (2016) Sustainable Development Goals: A need for relevant indicators. Ecological Indicators, 60 (1). DOI: https://doi.org/10.1016/j.ecolind.2015.08.003.

7. Kisel A., Sryukina L. Environmental safety of construction processes in the Republic of Belarus (2020) International Conference on Building Energy Conservation, Thermal Safety and Environmental Pollution Control (ICBTE 2020), E3S Web Conf., vol. 212, 2020. 8 p. DOI: https://doi.org/10.1051/e3sconf/202021202007

8. Kisel, E.I., Sryvkina, L.G. (2022). Environmental Aspects of Construction Site Organization. Organization of Construction Production: Materials Scientific Conference, pp. 94-105.

9. Kisel, E.I., Sryvkina L.G. (2023). Implementation of Environmental Principles in the Organization of Construction Production. Architectural and Construction Complex: Problems, Prospects, Innovations. Novopolotsk: PSU, 2024, pp. 363–368.

10. Kisel, E. (2013), Production Systems in Construction, Their Characteristics and Properties. Enhancing the Economic Potential of Economic Systems in the Brest Region: [Collective Monograph], Brest: BrSTU, 2013, pp. 106–111.

11. Kisel, E.I., Sryvkina L.G. (2022). Prospects for the Development of "Green" Construction in the Republic of Belarus. Current Issues of Modern Economic Systems – 2022: Collection of Scientific Works. Brest: BrSTU, 2022, pp. 86–92.

12. Kisel, E.I., Mikhailova N.V. (2018). Trends in the Development of Environmental Management in Construction in the Republic of Belarus. Improving Investment and Construction Processes in the Markets of Central and Eastern Europe: Collection of Scientific Works. Brest: BrSTU, 2018, pp. 44–50.

13. Mensah, J. (2019). Sustainable development: Meaning, history, principles, pillars, and implications for human action: Literature review. *Cogent Social Sciences, 5*(1). DOI: https://doi.org/10.1080/23311886.2019.1653531

14. Obolewicz J. (2022) Transformacja w Kierunku GOZ w budownictwie, Materiały pokonferencyjne I Konferencji naukowo-dydaktycznej Gospodarka o obiegu zamkniętym w budownictwie, Łomża.

15. Saka, N., Olanipekun, A. O., & Omotayo, T. (2021). Reward and compensation incentives for enhancing green building construction. Environmental and Sustainability Indicators, 11, 100138. DOI: https://doi.org/10.1016/j.indic.2021.100138

16. Sánchez Cordero, A., Gómez Melgar, S.,Andújar Márquez, J. M. (2019). Green Building Rating Systems and the New Framework Level(s): A Critical Review of Sustainability Certification within Europe. Energies, 13(1), 66. DOI: https://doi.org/10.3390/en13010066-
17. Swarnakar, Vikas, Khalfan, Malik. (2024). An analysis of circular economy adaptation in construction and demolition waste management sector: a systematic literature review and conceptual implementation framework. Smart and Sustainable Built Environment. 10.1108/SASBE-08-2024-0284. DOI: 10.1108/SASBE-08-2024-0284.
18. Szruba, M. (2021). Budownictwo wspiera ekologię. Nowoczesne Budownictwo Inżynieryjne nr 2 (95), p13-30.

dr hab. inż. Jerzy Obolewicz, prof. MANS
International Academy of Applied Sciences in Lomza, Poland
Institute for the Safety of Anthropogenic Objects
Centre for Construction Expertise, Poland
ORCID: 0000-0002-7866-0039
obolewiczjerzy@gmail.com

3. OCCUPATIONAL SAFETY ENGINEERING IN THE IMPLEMENTATION OF CONSTRUCTION PROJECTS

Abstract

Construction objects are buildings, structures and small architectural objects that are created during the implementation of a construction project. The construction process is characterized by a high level of health and life hazards for participants taking part in it. These hazards may result from improper design, implementation and use of the facility, working conditions, high variability of weather conditions and employee behavior resulting from applicable legal requirements, principles and culture of occupational safety or omission of broadly understood safety issues related to the facility. In order to prevent this, knowledge is needed that allows eliminating or reducing the size of threats to humans to the allowable sizes expected to occur during the implementation of a construction project. Knowledge in the area of occupational safety engineering, which includes organization, planning, responsibility, rules of conduct, procedures, processes and resources needed to develop, implement, implement, review and maintain the appropriate level of occupational safety at all stages of the investment process in construction, may be helpful in action. The proposed approach to the subject of occupational safety during the implementation of construction projects using engineering achievements is a rich source of knowledge in the field of safety engineering for both participants in the construction process and students of construction fields and people interested in the issues of occupational safety in construction.

Keywords: construction, occupational safety, construction project, safety engineering.

3.1. Introduction

Safety in the general sense means the absence of physical threat to humans or protection of humans against it. The essence of safety engineering of construction projects is the procedure (in technical, economic, legal and organizational scope occurring in the processes of planning, design, execution and operation / use, leading to the safe performance of all works related to the construction project (Fig. 1).

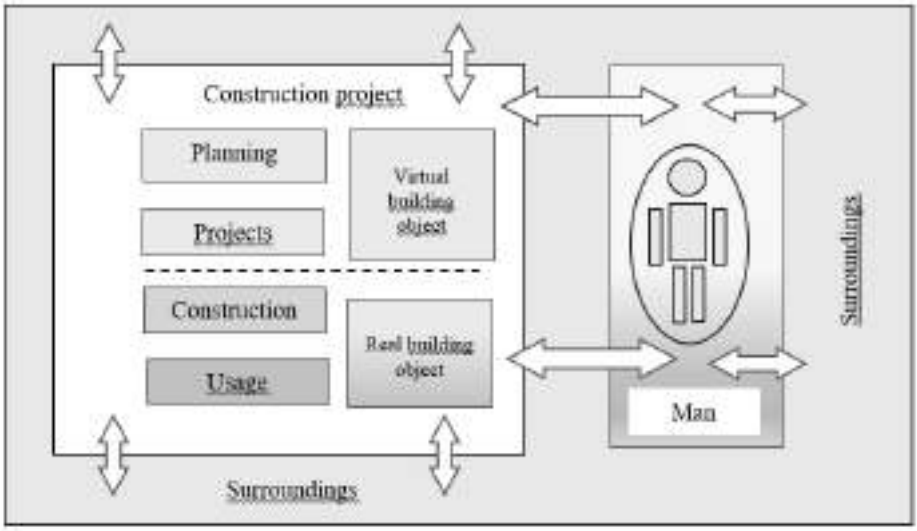

Fig. 1. Ideological diagram of occupational safety engineering conditions during the implementation of construction projects

Source: Obolewicz, 2018, 2021b, 2022

A person participating in the implementation of an undertaking in which a building is being constructed performs their work in a specific system: building – human – environment. In this system, the following may arise: threats to humans originating from the building, threats to the building originating from humans, threats to the surroundings originating from the building and threats to the building originating from the surroundings. Knowledge

becomes essential in the safe implementation of construction undertakings, thanks to which actions can be taken to give the virtual and real building such features that will allow for:

- elimination or reduction of the size of threats to humans to permissible values expected to occur during the period of use of the building,
- elimination or reduction of the size of threats to the surroundings of the building under the influence of functional-utility and construction-material solutions.
- Occupational safety engineering of complex construction projects requires a broader understanding of knowledge in the following areas:
- interdisciplinary, general technical and specialist knowledge in the field of knowledge of basic methods and tools used in solving engineering tasks related to the broadly understood safety of construction objects – in the processes of their design, implementation and operation;
- knowledge of modern technologies and research tools enabling detection and forecasting of the development of threats, ICT processing of information, protection and counteracting threats and elimination of their effects;
- skills in diagnosing the state of threat to construction objects using modern technologies and research tools;
- knowledge of the principles of safety engineering adopted in European and national legislation (Obolewicz, 2017, 2021a).

Construction is a branch of the national economy characterized by a high level of health and life hazards for participants involved in the implementation of a construction project. These hazards are the result of improper design, implementation and use of the facility, working conditions, high variability of weather conditions and employee behavior resulting from applicable legal requirements, principles and culture of work safety or omission of issues of broadly understood safety related to the facility.

Construction projects belong to the multi-topic specialty of construction, which is engineering of construction projects, which covers issues of the entire life cycle of a building regarding planning, design, construction and operation / use, combining previous engineering specialties such as: design, building structures, road construction, technology and organization of construction, construction management, management of construction projects

and companies as well as operation of building facilities, including their renovation and modernization together with demolition and waste management.

In maintaining the proper state of occupational safety in construction, all participants of the undertaking (investor, construction supervision inspector, designer, construction manager/works manager, facility manager) participate and play an important role, each in their area of activity (Obolewicz, 2016, 2020, 2022).

The classic construction process includes three basic stages: the stage of preparation of the undertaking, implementation and operation of the construction object. In the proposed approach to the process, including safety analysis, civil engineering takes on fundamental importance. It ensures the widest possible consideration of the dependencies that make up the construction processes together with their participants (Obolewicz, 2018).

The proposed approach to the subject of occupational safety during the implementation of construction undertakings using engineering achievements is a rich source of knowledge in the field of safety engineering for both participants of the construction process and students of construction studies and people interested in the issue of occupational safety in construction.

3.2. Construction project

In the common sense, each undertaking is an economic activity aimed at achieving a certain individual goal, which can be achieved in a predetermined time and within a specified budget.

A construction undertaking is a clearly defined action aimed at achieving a certain individual goal, which can be achieved in a predetermined time within a specified budget., in which construction objects are created. These undertakings are characterized by a high level of health and life hazards for employees and a large number of accidents. Regardless of their purpose, construction objects (virtual and real) should be safe during construction and functional, useful and safe during operation.

Using the definition of organization by prof. Kopaliński and prof. Kotarbiński (Kopaliński,1992) and the considerations of the creators of Polish organizational thought (Bednarski, Szlendak, 1997; Mierniczyk, Szcześniak, Zygmunt i in., 2013), each construction project can be presented as a whole composed of parts that are treated as its fragments, aiming at a set common goal. The task of the investor is to set goals for these fragments. With the help

of procedures and schemes, complex situations occurring in the investment process, which individual fragments / parts of the organization encounter, are simplified. This allows for easier interpretation and reference to situations that a given fragment / part of the construction project has encountered. The use of procedures integrates all the fragments and leads to the selection of the optimal solution that will satisfy the investor's needs. The investor's activity in this area consists in integrating all the fragments of the construction project implementation process. The investor's lack of interest in this area may lead to the emergence of unforeseen situations that threaten work safety and the emergence of a threat to the health and life of employees or users of the building.

Analyzing the actual conditions prevailing during the implementation of construction projects (Baryłka, 2018a; Jacewicz, 2006; Korzeniewski, 2005; Krupa, 2005; Obolewicz, 2017, 2022; Połoński, 2008; Połoński, Pawluk, Rybka, 2017), barriers are noticed in the documentation of the preparation stage of the implementation of projects, in which the organizational safety of planned investments is analyzed. These are mainly deficiencies in formal and legal studies resulting from imprecise legal provisions, deficiencies or errors in organizational and administrative procedures or lack of competence of people involved in the preparation of investments for implementation.

The construction object, which is the subject of the project, changes its parameters during the construction process. At the stage of preparing the project for implementation, it is a virtual object, which during construction is transformed into a real object. During construction, in addition to changing parameters, the building materials, tools, machines and equipment used and the environment in which construction works are carried out also change. The behavior of employees also changes in relation to the work carried out, which in many cases leads to a decrease in the level of safety on the construction site (Obolewicz, 2012, 2016; Pęciłło, 2005). The investor and employer participating in the construction stage of the object are obliged to ensure the safe course of construction works due to the applicable legal regulations and moral responsibility for other people. Safe working conditions are one of the basic factors determining the success of business activities and their failure to do so may lead to accidents. Accidents may be the result of unsafe working conditions, high variability of work during the construction of the object and inappropriate behavior of participants, including unsafe behavior of construction workers.

In assessing the safety status in the process of implementing a construction project, the main role is played by accident statistics resulting from human behavior, their culture and safety climate. When compared, they provide an opportunity to assess and determine the level of work safety and then apply appropriate prevention in the analyzed stage of the process.

To assess and analyse work safety during the implementation of construction projects, an organisational model of the process was used, taking into account the basic elements that affect safety at the stage of preparation, implementation and operation of the construction object. The following activities were carried out when creating the organisational model:

- the construction project was divided into smaller components (activities);
- the activities were functionally grouped into sets in accordance with a logical arrangement that took into account the criterion of the same or similar activities, while ensuring their identifiability and significance as well as autonomy and feedback,
- the structure of the construction project implementation process and the dependencies between individual sets were established;
- coordination of activities in individual sets and between sets was enabled;
- sets of activities were assigned to individual process partners in three main groups: preparation, implementation and operation of the construction object (Obolewicz, 2020, 2021a).

The proposed model distinguishes two areas of the existence of a building: virtual and real (actual), and four stages in them:

- Area A. Construction investment process (virtual):
  - Stage I. Preparation of the construction project for implementation;
  - Stage II. Implementation of the construction project;
- Area B. Operational investment process:
  - Stage III. Use (operation) of the building;
  - Stage IV. Liquidation of the building (giving it new life).

It was assumed that there are no direct threats related to construction objects in the virtual area and they were omitted from the considerations. However, it should be remembered that preparing the investment for

implementation in the virtual area has a significant impact on work safety during construction and operation of the construction object. The stage of implementation and operation located in the real (actual) area of the construction object is the main place of occurrence of real threats to the health and life ofconstruction workers. It should be remembered that each construction object can be liquidated or given a "new life". The diagram of the model of the construction project implementation process is shown in Fig. 2.

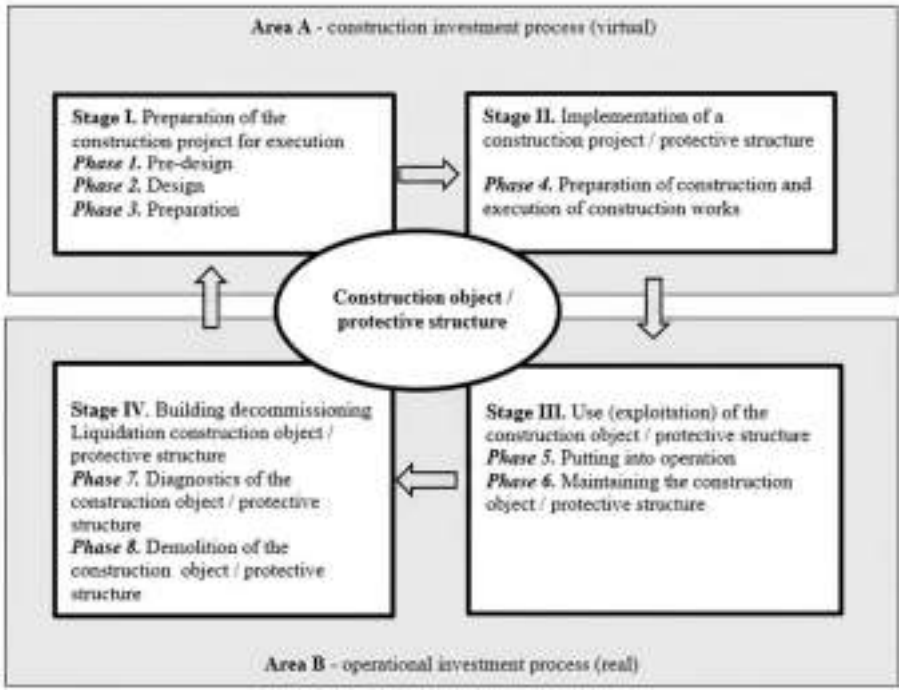

Fig.2. Model of the construction project implementation process

Source: Obolewicz, 2016, 2018

To analyze work safety during the implementation of a construction project, each stage of the process has been divided into phases, the analysis of which allows for determining the causes of events that could initiate accidents during the implementation of the construction project. These activities, in the subsequent sequence, allow for determining the directions of improvements that individual participants of the construction project should

undertake. The diagram of the construction project implementation process model is presented in Fig. 3.

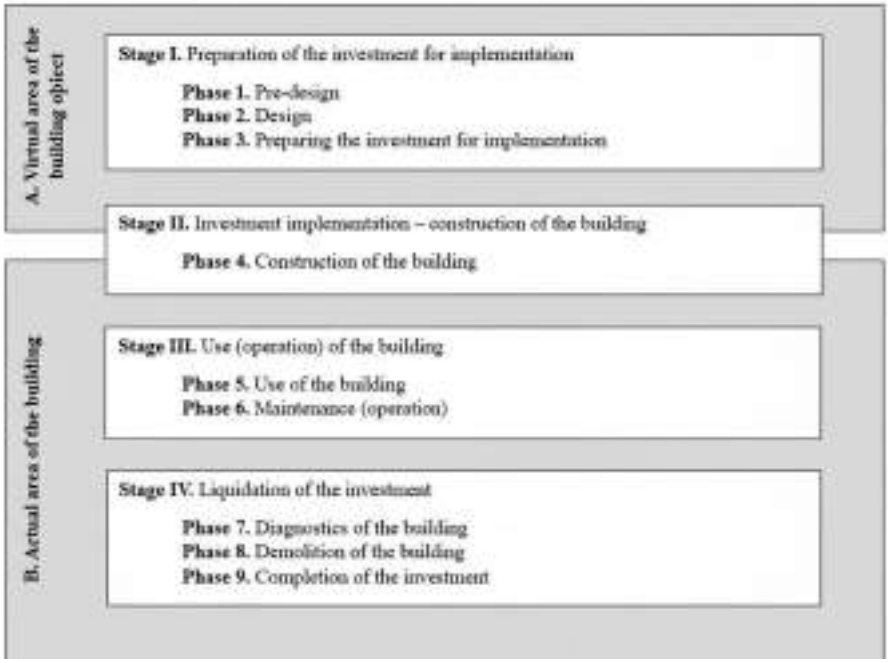

Fig. 3. Model of the construction project implementation process divided into individual phases

Source: Obolewicz, 2016, 2018

3.3. Work safety

Occupational safety is an ambiguous concept and depending on the area or field of research it has been and still is interpreted differently in the literature. In most cases it is associated with the area of management (Ejdys, 2010; Ejdys, Lulewicz, Obolewicz, 2008; Klamut, 2012). In the EU policy, the development and maintenance of occupational health and safety at the national level is preferred (Babichenko J.S, Babichenko S.I, 2008; Baryłka, Obolewicz, Kisiel, 2020). Despite this, the issue of occupational safety is not one of the largest research sectors. The subject of research conducted in this area is very small, accounting for about 1% of all European research (Brenner, 1975; Facts nr 55/2003, 2003; Mullen, 2004; Błachut, Nikitiuk, Nowak i in., 2007; Obolewicz, 2018, 2021b, 2022).

The simplest meaning of the term "security" can be found in the etymology of the word. In Latin, the concept of "security – securitas" consists of two elements: sine (without) and cura (worry, fear, apprehension) and means a state of no threat, peace, certainty, lack of worries and fear, a sense of certainty and protection from dangers (Stańczyk, 1996; Czaputowicz, 1998). Historically, work safety was identified with technology. From ancient times to the industrial revolution in Great Britain (1750-1840), the development of technology was small and the issues of work safety and health protection were invisible (Tytyk, 2001, 2002). Changes in the approach to the issue of occupational safety began with the first technical revolution (Szlendak, Obolewicz, 2002, 2005). Mass production, a large number of technical objects and a large number of employees required a new safe "organization of work" that had to be learned. The production process was increasingly technically complex and generated accidents. The first legal regulations concerning occupational safety were created to prevent accidents. At the same time, research on work processes and their safe organization began, as well as the search for regularities in employee behaviors, which over time formed a specific series of trends and principles of organizational thought and were a supplement to the four main directions: technical-physiological, administrative, psychological-sociological and contemporary (Szlendak, Obolewicz, 2002, 2005). Supplementing the directions of organization and management with the issue of occupational safety was consistent with Maslow's considerations on the subject of basic human needs and became the foundation for the development of sciences on occupational safety (Stelmach, 2008).

With the development of organizational and management directions supplemented with occupational safety issues, the idea of subjective safety emerged. In the initial period, this idea meant the protection of the interests of the workforce in the functional approach, understood according to Kotarbiński as all activities aimed at overcoming difficulties in satisfying the basic needs of the workforce. Until the 1970s, research on work processes focused mainly on improving the equipment of work stations, selecting equipment, machines and devices, and increasing work efficiency. This period was characterized by a low level of occupational safety, and the measure of this level was the number of accidents at work (Ejdys, Lulewicz, Obolewicz, 2008).

There were two basic views in the literature on the purposefulness of activities in the area of subjective safety. Some authors believed that the purpose of occupational safety is to protect the health and life of employees in the work

environment, in order to protect their ability to work. Others, on the other hand, claimed that the basic purpose of subjective safety is to protect the health and life of the employee, and the fact that the employee is healthy guarantees their ability to work (Obolewicz, 2018, 2021a, 2021b). In legal sciences, the concept of subjective safety was interpreted in a broad and narrow sense. In a narrower sense, subjective safety was a set of legal norms aimed at ensuring safety by employers by protecting the health of employees against the harmful effects of the work environment on their health and against threats to their life. In a broader sense, subjective safety included labor law norms and regulations regulating obligations and principles of liability for non-compliance with them or labor law norms of a protective nature, e.g. protection of the durability of the employment relationship, remuneration for work, setting minimum working hours or setting minimum leave.

In his works, Szubert organized the existing knowledge and defined labor protection as a system of legal, economic, organizational and technical measures aimed at ensuring employees' safety and health protection in the work process, and treated the system as a set of ordered units creating an organizational whole serving a specific purpose (Szubert, 1996; Obolewicz, 2018). In international law, regulations aimed at ensuring employees' safety and health protection at work were separated from the general labor protection and defined as employee safety and health regulations. In Polish law, this separation was defined as occupational health and safety regulations. Despite the similarity of the nomenclature adopted in international and Polish law, the term in Polish law refers to the subject of regulations and concerns work or working conditions, while in international law these regulations concern the subject of work, i.e. the employee (Kowalski, Krzyśków, 2000; Kuchta, Tylek,Rawska-Skotniczny, 2017).

The Labor Code includes the concept of labor protection, which defines basic regulations concerning labor protection. The regulations included universal protection ensuring the safety and health of all employees and labor protection as special protection of women and young people (Kowalski, 1999; Kowalski, Krzyśków, 2000; Ustawa z dnia 7 lipca 1994 r. Prawo budowlane).

The concept of subjective safety is associated with the concept of "threat", which is its antonym. Threat refers to the sphere of consciousness of the subject and means the state of the psyche or consciousness caused by the perception of phenomena assessed as unfavorable or dangerous. The perception of threats and the sense of security are a reflection of the real or potential threat in human consciousness. In psychological considerations,

the perception of threats may be inconsistent with the actual state. Hence, when assessing the state of safety, the reality in which these threats arise should be taken into account (Kołodziński, 2006, 2007, 2010).

In the literature, threats to the security of an entity are divided according to the source of their occurrence into:

- natural threats, related to the activities of nature, which may cause catastrophes,
- civilization threats, related to human activity, which may cause catastrophes and technical failures as well as extraordinary threats (Mierczyk, Szcześniak, Zygmunt, i in., 2013; Szcześniak, Krzewiński, Pieńko, Urbanowicz, 2012; Szcześniak, Pieńko, 2010; Szcześniak, Pieńko, Kozera, 2013).

With the development of science and progress in technology, the number of factors generating threats to personal safety increased. New, previously unknown threats, called domain threats, emerged, e.g. threats in work processes. Humanity had no experience with safe behavior in new situations. Research was needed on perception and reactions to situations in which threats occurred (Alidi,1996; Obolewicz, 2018; PIP. Sprawozdania z działalności Państwowej Inspekcji Pracy w latach 2019-2023; PIP. Sprawozdanie z działalności Państwowej Inspekcji Pracy w 2023). Initially, in cases of new, unknown threats, people tried to prevent them intuitively. These actions did not work in practice.

The necessary condition for counteracting events resulting from threats to personal safety in work processes was their detection, identification and monitoring. The method of action depended on the type and environment of work. The process of primary prevention was formed historically. Since ancient times, man has tried to subordinate the natural environment to himself. Through work, he introduced changes that made life easier. With the passage of time, the level of civilization was determined by new anthropogenic objects that served to improve life and control nature, which were related to technique, technology, organization, management, etc. In general, they improved existence and increased the comfort of life. On the one hand, they reduced the number of natural threats, but on the other hand, they generated new threats. This meant that man constantly functioned in an environment of existing and potential threats. As a result of unfavorable changes, potential threats could be activated and turn into real threats – events unfavorable to life or health, or to the state of the human environment. Preventive The level of security of an entity (a person, group, organization, etc.) in a global perspective

depends today on many domain-specific security levels, including occupational safety Facts nr 55/2003, 2003).

The required level of security can be achieved in many ways and its level can be influenced by:

- preventing the occurrence of a given type of threat,
- preparing the entity in the event of the activation of a given type of threat (education, deployment of countermeasures and resources, etc.),
- increasing the effectiveness of forces and resources in counteracting the effects of a dangerous event,
- effectiveness of actions in eliminating the consequences of a dangerous event.actions required a broader global approach.

It should be remembered, however, that the state of safety is not a stable state. In the real world, new threats appear caused by the forces of nature or unintentional and/or intentional human activity. Therefore, each entity must make efforts to ensure the stability of the state of safety. In achieving this goal, occupational safety systems that use the achievements of science and knowledge of management can be helpful. Safety management should be preceded by the identification of the subject threat. The information obtained about threats allows for the development of procedures for the entity (planning, organizing, acting, controlling), in which there is a possibility of using activities that allow for the optimization of information and decision-making processes in individual phases of the procedure, which have an impact on the behavior of entities participating in the work processes (Barling , Loughlin, Kelloway, 2002; Mullen, 2004; Pęciłło, 2005). The behavior of work entities (human behavior) determines the current and future state of safety. They depend on culture on the one hand and shape the culture of the participants of the construction project on the other. Their culture has a great influence on the behavior of participants. Occupational safety culture is an element of the general safety culture of each organization (Milczarek, 2001, 2002; Ejdys, 2010) and is treated as one of the components of organizational and social culture (Mearns, Flin, 1999; Glendon, Stanton, 2000; Guldenmund, 2000; Milczarek, 2002; Rakowska, 2013).

The concept of occupational safety culture in an organization appeared in the early 1920s. It was then noticed that a workplace is a social (subjective) organization that generates its own norms, values, and ways of proceeding. In the 1980s, companies began to be treated as organizations with their own

subjective culture (Pidgeon, 1999; Guldenmund, 2000; Milczarek, 2002; Szcześniak, Zieliński, 2012; Rakowska, 2013).

In general, safety culture is a sphere of accepted rules of conduct of all employees, both management and workers, and a subset of the general culture of the organization formed in a long-term, multidimensional and continuous process, covering the entire structure of the enterprise (Pidgeon, 1999; Ejdys, 2010). Each safety culture originates from the culture of the organization. However, the interpretation of both terms differs (Rakowska, 2013). The culture of the organization can be described by attributes, avoiding its evaluation. On the other hand, the culture of work safety, after recognition, should be analyzed and its qualitative and quantitative features should be sought, thanks to which it is sought to evaluate it mainly in the context of improving safety at work. The assessment of the work safety culture in the organization allows for the development of recommendations for this organization and the determination of directions of changes aimed at improving or determining directions of improving safety management or cultural transformations.

The term "safety" is associated with the behavior of people, and "culture" is associated with understanding the importance of these behaviors in the organization. The relationships between employee behaviors and culture are consistent because both are related to the basic assumptions of the organization in matters of safety. The rules of cultural perception and behavior are shaped by the involvement of employees in the physical work environment (tools, machines, work station organization) and by employee behaviors (compliance with occupational health and safety regulations, transfer of information, cooperation, concern for safety beyond duties), resulting from their internal characteristics such as knowledge, skills, motivation (Geller, 1996).

The analysis of human behavior in an organization influences the humanization of technology. In the humanization of technology, the most important element is the human (subject), their knowledge and skills, attitudes and perception of work safety (Milczarek, 2000, 2001, 2002) and their beliefs and concern for their own safety and that of their co-workers. According to researchers, work safety is necessary from a moral, economic and social point of view at three levels of the organization: operational, tactical, strategic (Stańczyk, 1996; Bednarski, 1998; Arboleda, Abraham, 2004; Basu, 2004; Pęciłło, 2005; Biała księga procesów inwestycyjnych na polskich drogach i liniach kolejowych, 2006; Bartusik, 2008; Baron-Puda, 2009; Baryłka, 2018b; Basta, Cendrowska, Kapczyńska, i in., 2008; Rakowska, 2013;

Kuchta, Tylek, Rawska-Skotniczny, 2017; Obolewicz, 2016, 2017, 2018; PIP. Sprawozdania z działalności Państwowej Inspekcji Pracy w latach 2019-2023). Considerations on work safety in an organization are consistent with the global strategy developed by the International Labor Organization (ILO). According to the ILO, building and maintaining a culture of occupational health and safety at the national level and applying a systemic approach to safety issues at the organizational level is a fundamental pillar of the global strategy in the field of occupational health and safety (Facts nr 55/2003, 2003; Ejdys, Lulewicz, Obolewicz, 2008). The global strategy was developed on the basis of international research in the EU as the basis for the concept of safety culture. The results of the conducted research allow for the conclusion that a high level of occupational safety culture or an appropriate occupational safety climate leads to a smaller number of accidents and a reduction of economic and social costs of each organization (Facts nr 55/2003, 2003; Rakowska, 2013).

3.4. Statistics of accidents at work in construction

The National Labour Inspectorate (PIP) registers accidents at work based on the applicable statistical accident card (PIP, 2024). Analysis of the data obtained makes it possible to learn about their causes and then formulate precise preventive of activity in specific areas of occupational hazards. According to PIP inspectors, three groups of factors influence the hazards at work on the construction site:

- **material and technical factors (T):**
  - materials, i.e. raw materials, semi-finished products, products, auxiliary materials, packaging, etc.;
  - construction site and its development, i.e. fencing, storage areas, work platforms, sanitary and hygienic rooms, administrative and office rooms,
  - buildings, rooms and work environment, i.e. sanitary and hygienic buildings, administrative and office buildings, construction media;
  - technical and production equipment, i.e. machines and devices related to construction works, transport, storage, e.g. machines the production of concrete mixtures, building mortars or reinforcement plants, etc.;

- **organizational factors (O):**
  - organization of work at the workstation,
  - organization of works, organization of construction,
  - organization of safe and hygienic working conditions,
- **human factors (L):**
  - a person with their individual characteristics in relation to the requirements at a given workstation, i.e. anatomical-physiological, psychological (ability, dexterity, attention) and qualification characteristics (PIP, 2024).

It was assumed, by approximation, that precise determination of the causes of an accident at work in post-accident investigations provides a starting point for determining factors influencing the level of occupational safety in the implementation of a construction project. It was assumed that the direct cause of an accident is the last event directly leading to an injury, e.g. contact with flame or a hot/burning object/environment, being hit by a falling object, or contact with a sharp object (knife, blade, etc.). On the other hand, the indirect cause of an accident is any deficiencies and irregularities that indirectly contributed to the occurrence of the accident.

The work uses the TOL taxonomy, in which the causes of accidents are arranged in three groups: technical, organizational, human (Tab. 1). In each group, subgroups and causes that occurred most frequently were specified, which were treated as factors having the greatest impact on the level of BIOZ. Analysis of factors causing accidents over the 10-year period (Fig. 4-13) confirmed the direction of the planned primary research.

Tab. 1. Technical, organizational and human causes according to the TOL taxonomy

No.	Group of causes	Subgroup	Cause
1	Technical reasons	Design defects of the material factor that constitute a source of danger:	– inappropriate spatial structure of the material factor; – inadequate strength of the material factor; – inappropriate stability of the material factor; – lack of or inappropriate safety devices; – lack of or inappropriate collective protection measures; – inappropriate control elements; – lack of or inappropriate hazard signalling; – inadequate adaptation of the material factor to transport, maintenance or repairs;
		Improper execution of the material factor:	– use of substitute materials; – failure to meet required technical parameters;
		Material defects of the material factor	– hidden material defects of the material factor;
		Improper exploitation of the material factor:	– over-exploitation of the material factor; – insufficient maintenance of the material factor; – inappropriate repairs and renovations of the material factor;
2	Organizational reasons	Inadequate overall work organization:	– incorrect division of labor or planning of tasks; – incorrect orders from superiors; – lack of supervision; – incorrect coordination of collective work; – performing, on the orders of persons exercising supervision, work that is not included in the scope of the employee's duties; – lack of instructions on how to use a material factor; – allowing a material factor to work without the required controls, inspections; – tolerance, by persons exercising supervision, of deviations from the regulations and principles of occupational health and safety; – insufficient professional preparation of the employee; – lack or improper training in the field of occupational health and safety; – tolerance, by persons exercising supervision, of the use of inappropriate technology; – allowing an employee to work with medical contraindications or without medical examinations; – performing work with too few staff; – performing work despite improper supply of tools and raw materials;

No.	Group of causes	Subgroup	Cause
		Improper organization of the workstation:	– inappropriate location of devices at the workstation; – inappropriate passages and accesses; – inappropriate arrangement and storage of work items (raw materials, semi-finished products, products, etc.); – failure to remove unnecessary items, substances or energy (e.g. waste, packaging, substance residues, not only power supply, etc.); – lack of personal protective equipment; – incorrect selection of personal protective equipment;
3	Human causes	Lack of or improper use of a material factor by an employee:	– improper location of devices at the workstation; – improper passages and accesses; – improper arrangement and storage of work items (raw materials, semi-finished products, products, etc.); – failure to remove unnecessary items, substances or energy (e.g. waste, packaging, remnants of substances, not only power supply, etc.); – lack of personal protective equipment; – improper selection of personal protective equipment; – using a material factor that is inappropriate for the given job; – performing work manually instead of using a material factor; – using a material factor when people are in the danger zone; – improper securing of the material factor (e.g. failure to apply the brake when stationary); – making a material factor available to an unauthorized person by an employee; – using a material factor contrary to its intended purpose; – improper gripping or holding of a material factor; – incorrect installation, mounting or suspension of a material factor by an employee;
		Failure to use protective equipment by an employee:	– the employee's failure to use personal protective equipment; – the employee's failure to use safety devices; – the employee's failure to use collective protective equipment;

No.	Group of causes	Subgroup	Cause
		Inappropriate arbitrary behavior by an employee:	– performing work that is not part of the employee's duties; – passing, driving through or staying in prohibited places; – entering, driving into a hazardous area without making sure that there is no danger; – performing activities without removing the danger (e.g. not only machinery, not only voltage); – driving too fast; – inappropriate use of limbs in a hazardous area; – joking, fighting;
		The employee's psychophysical condition does not ensure safe performance of work, caused by:	– sudden illness, physical indisposition; – chronic or acute mental illness; – fatigue; – nervousness; – consumption of alcohol, narcotics or psychotropic substances;
		Inappropriate employee conduct caused by:	– unawareness of the hazard; – unawareness of the occupational health and safety regulations and principles; – underestimating the hazard (bravado, risk-taking); – ignoring the instructions of superiors; – insufficient concentration on the task being performed; – being surprised by an unexpected event; – inappropriate pace of work; – lack of experience.

Source: PIP. Sprawozdania z działalności Państwowej Inspekcji Pracy w latach 2019-2023

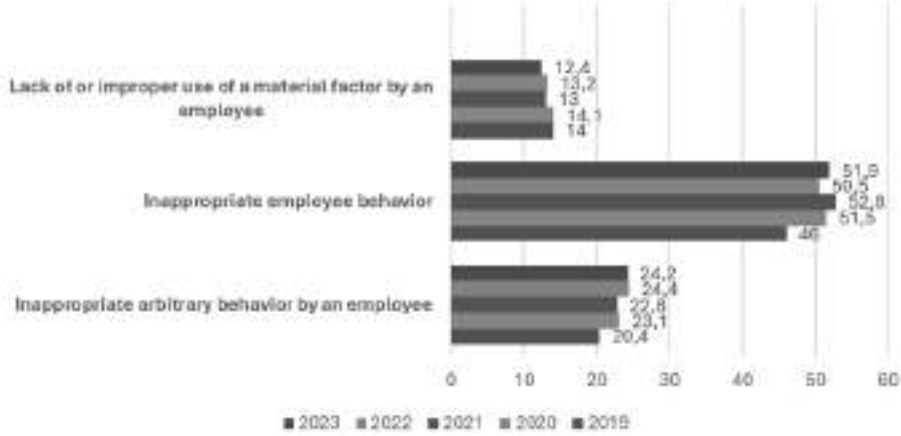

Fig. 4. Causes of accidents at work (human) investigated by PIP in 2019-2023

Source: PIP, 2024

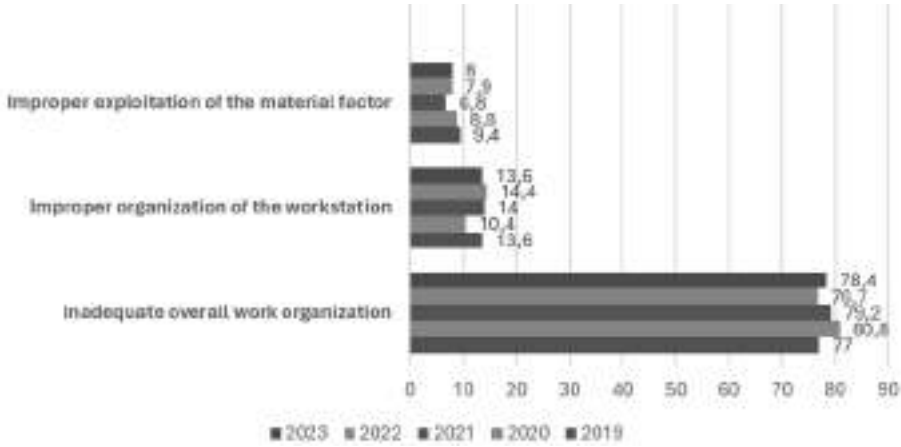

Fig. 5. Causes of accidents at work (organizational) investigated by PIP in 2019-2023

Source: PIP, 2024

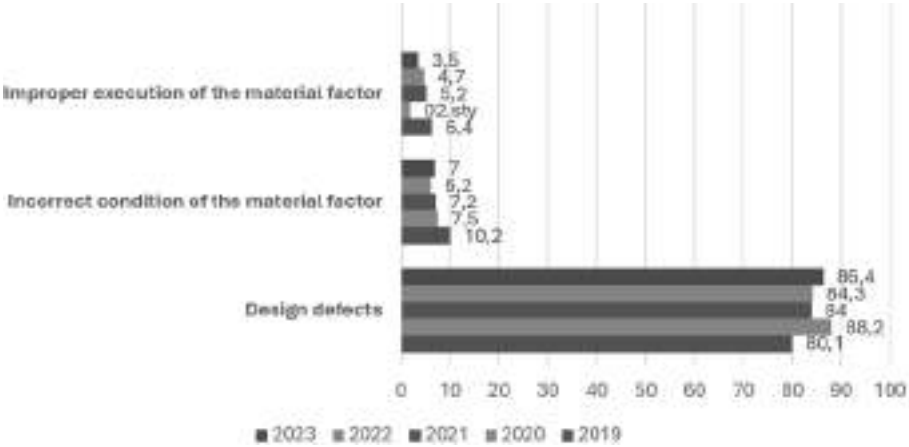

Fig. 6. Causes of accidents at work (technical) investigated by PIP in 2019-2023

Source: PIP, 2024

Fig. 7. Summary of the causes of accidents at work according to the TOL classification, broken down into the years 2019-2020-2021-2022-2023

Source: PIP, 2024

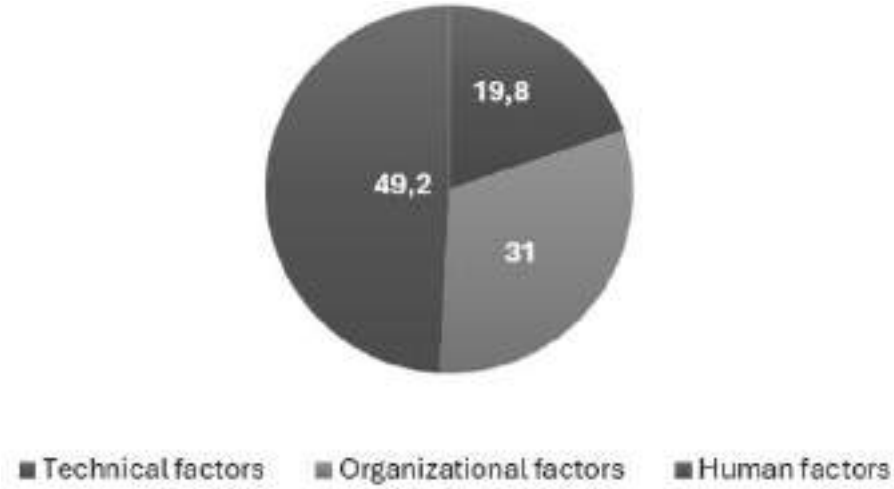

Fig. 8. Summary of causes of accidents at work according to the TOL classification in the 5-year period of 2019-2023

Source: PIP, 2024

Analysis of the causes of accidents according to the TOL classification over a 5-year period allowed us to identify the main causes of accidents. These are most often:

- human causes (49.2%), including improper employee behaviour;
- organizational causes (31.0%), including improper general work organization;
- technical causes (19.8%), including design defects of the material factor that are the source of the hazard.

Recognizing the main causes of accidents allows us to determine the directions of preventive actions. Preventive actions should be shaped in two basic directions. On the one hand, it is necessary to strive for a better understanding of the perception and behavior of employees by recognizing the psychological conditions of the employee and influencing the employee's inappropriate behavior (Czaputowicz, 1998; Mearns, Flin, 1999; Glendon, Stanton, 2000; Chua, Goh, 2004; Global Strategy on Occupational Safety and Health, 2004; Carter, Smith, 2006; Chen-Yu Chang, 2013). On the other hand, construction workstations should be organized, equipped and secured in the construction process so that in the event of even a temporary indisposition, the employee is not exposed to an accident, death or damage to health

and does not threaten the safety of other employees (Kumał, 1970; Kieżun, 1977; Połoński, Pawluk, Rybka, 2017; Obolewicz, 2021b; Szlendak, Obolewicz, 2002, 2005). Secondary research from 2019-2023 was supplemented by research conducted on the basis of preliminary data from accidents at work in 2024 developed by the Central Statistical Office (GUS, Dane wstępne GUS za 2024 r.). They allowed for updating information on work safety in the implementation of construction projects.

According to the preliminary data of the Central Statistical Office published on April 10, 2025, in 2024 the number of people injured in accidents at work in Poland amounted to 67,000 people. The injured were mainly employed in the mining and quarrying section, and construction continued to rank high (GUS, Dane wstępne GUS za 2024 r.). According to preliminary data from the Central Statistical Office for 2024:

- the dominant group of events causing injuries was hitting a stationary object, which accounted for 29.9% of all events causing injuries;
- the main cause of accidents at work was employee misconduct, which accounted for 42.3% of all employee misconduct;
- the most common activity performed by the injured person at the time of the accident was moving, which accounted for 38.6% of all activities;
- the injury was located in the upper and lower limbs, which accounted for 78.6% of all injuries (GUS, Dane wstępne GUS za 2024 r.).

Analysis of data developed by the National Labor Inspectorate and the Central Statistical Office in the years 2019-2024 regarding factors affecting the level of occupational safety made it possible to determine the causes (factors) that should be considered in order to increase or maintain the level of occupational safety during the implementation of construction projects. The most common causes of accidents at work are, in the following order: human, organizational, technical, to which special attention should be paid and actions to minimize the risk of their occurrence should be developed. The most common causes of accidents at work include employee behavior and work organization, among which incorrect and inappropriate arbitrary behaviours and general and improper work organization dominated, which should be treated as human errors. Each employee can make a mistake, because making mistakes is an element of every person's life and activity. The nature of the error is complex, and the causes of their occurrence can be described from many points of view: human, organizational or technical.

There is no unambiguous, universal definition of an error. A good comparison is the combination of the definitions of Fröderberg and Rigby. Fröderberg defined an error as any unintended action (Fröderberg, 2014), while Rigby treated an error as a form of human action that exceeds the limits of acceptability (Rigby, 1970). Therefore, an error is an unintended action among undesirable actions, including human actions that exceed the limits of acceptability. The classification of human errors is presented in Fig. 9.

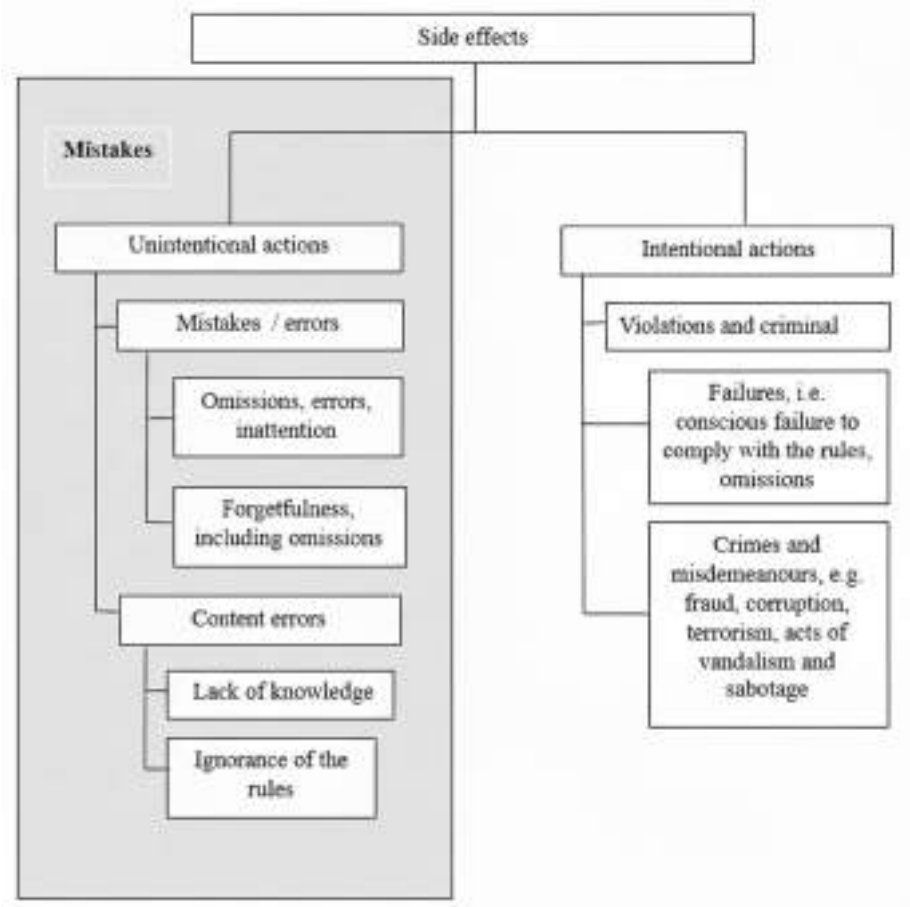

Fig. 9. Classification of human errors prepared based on (Kowalski, Krzyśków, 2000; Połoński, Pawluk, Rybka, 2017).

Source: Kowalski, Krzyśków, 2000; Połoński, Pawluk, Rybka, 2017

Among human errors, we can distinguish mistakes and substantive errors (Kuchta, Tylek, Rawska-Skotniczny, 2017). Mistakes are errors that are not caused by lack of knowledge or experience, but by the weakness of human memory, susceptibility to stress, fatigue, etc. This subgroup includes oversights – in other words, errors of inattention – and forgetfulness with omissions. Substantive errors are the result of misunderstanding the essence of phenomena and the relationships and dependencies between them. Their causes are lack of knowledge and ignorance of principles. Errors resulting from lack of knowledge may manifest themselves in creating incorrect solutions based on existing basic principles. Errors resulting from ignorance of principles may be the reason for making a bad choice from a group of known solutions to a problem, incorrect assessment of the situation, or incorrect interpretation of principles.

Human errors, depending on the time of their effects, can also be defined as overt and latent. The former – overt in construction are usually made by people who have direct contact with the construction site, and the effects of their actions are noticeable almost immediately. Latent errors can occur at the planning, design or operation stage. These errors can exist in a building for a longer period of time and become apparent only in specific circumstances, e.g. during the use of the building (Hotała, Rykaluk, Hotała, 2011; Kajfasz, 2006). They are made by people who cannot immediately check the effects of their actions (e.g. architects, designers or users).

3.5. Rights and obligations of construction project participants regarding work safety

Occupational safety during the implementation of a construction project is defined as the state of conditions and behaviours of all participants in the construction project ensuring the required level of health and life protection against hazards occurring throughout the entire process called the life cycle of the constructed object (Fig. 10).

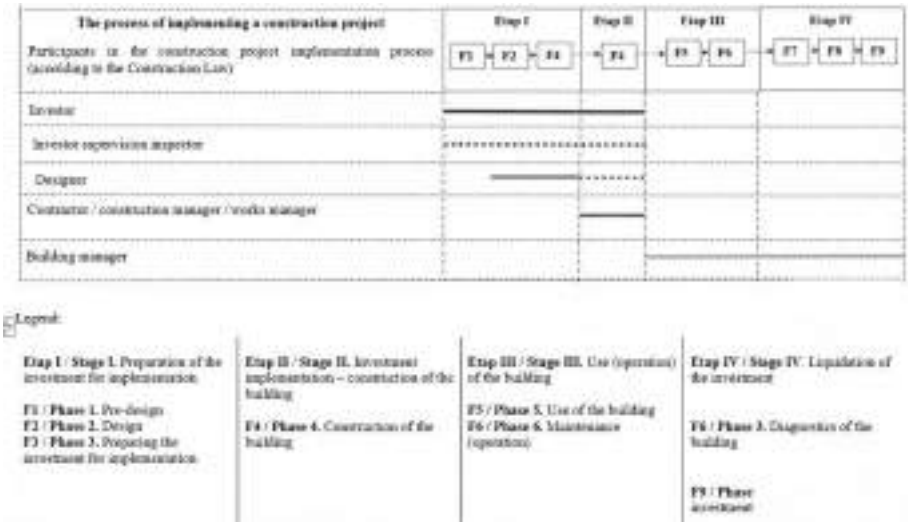

Fig. 10. Participants in the process of implementing a construction project

Source: Obolewicz, 2018

The construction object as a whole and its individual parts, together with the related construction equipment, should, taking into account the expected period of use, be designed, built and used in a manner specified in the regulations, including technical and construction regulations, and in accordance with the principles of technical knowledge and safe work principles applicable to participants in the construction process. According to the construction law, the participants in the process of implementing a construction project are: the investor, the investor's supervision inspector, the designer, the construction manager / works manager, the manager of the constructed object. Each of them has specific tasks, should have the required competences and bears responsibility related to the position held. It should be remembered that ignorance of the regulations does not exempt them from responsibility (Obolewicz, 2021a, 2021b, 2022; Ustawa z dnia 7 lipca 1994 r. Prawo budowlane).

The ***investor's obligations*** include organizing the process, taking into account the rules of procedure and technical knowledge contained in the regulations, and in particular ensuring:

1) development of the construction design and, if necessary, other projects assuming construction management by the construction manager,
2) development of a health and safety plan (bioz),
3) execution and acceptance of construction works and, in cases justified by the high degree of complexity of construction works or ground conditions, supervision over the performance of construction works – by persons with appropriate professional qualifications.

The investor may appoint an investor's supervision inspector at the construction site (Ustawa z dnia 7 lipca 1994 r. Prawo budowlane).

The basic duties of the ***investor's supervision inspector*** include:

1) representing the investor on the construction site by monitoring the compliance of its implementation with the design or building permit, regulations and principles of technical knowledge;
2) checking the quality of the construction works performed and the use of products in accordance with the law when performing these works;
3) checking and accepting construction works that are being covered up or disappearing, participating in tests and technical acceptance of installations, technical devices and chimney flues, as well as preparing and participating in the acceptance of finished construction objects and putting them into use;
4) confirming the works actually performed and removal of defects, and also, at the investor's request, controlling the construction settlements (Ustawa z dnia 7 lipca 1994 r. Prawo budowlane).

The basic duties of a ***designer*** include:

1) developing a building design in a manner consistent with the requirements of the Act, the provisions specified in administrative decisions concerning the building project, applicable regulations and principles of technical knowledge, and in particular:
   - ensuring, if necessary, the participation in the development of the building design of persons with building qualifications to design in the appropriate specialty;
   - preparing information on health and safety (bioz) due to the specificity of the designed building object, taken into account in the health

and safety plan (bioz) and determining the area of impact of the object;

2) obtaining the required opinions, agreements and verifications of design solutions to the extent resulting from the regulations;
3) clarifying doubts regarding the design and the solutions contained therein;
4) exercising authorial supervision at the request of the investor or the architectural and construction administration body.

The designer ensures that the architectural and construction design and technical design are checked for compliance with the regulations, including technical and construction regulations, by a person with construction qualifications for unlimited design in the relevant specialty. The investor may oblige the designer to exercise authorial supervision (Ustawa z dnia 7 lipca 1994 r. Prawo budowlane).

The basic duties of the ***construction manager*** include:

1) taking over the construction site from the investor in a formal manner and appropriately securing it, together with the construction facilities, technical devices and permanent geodetic control points located thereon, as well as protected elements of the natural and cultural environment;
2) maintaining construction documentation;
3) ensuring geodetic marking out of the facility and organizing and managing the construction of the construction facility in a manner consistent with the design or building permit, regulations, including technical and construction regulations, and occupational health and safety regulations, and in particular:
   - coordinating the implementation of tasks preventing threats to safety and health protection;
   - coordinating activities ensuring compliance with the occupational health and safety principles contained in the regulations and in the safety and health plan (bioz plan) during the performance of construction works;
   - introducing necessary changes to the safety and health information (bioz information) and the bioz plan, resulting from the progress of the construction works;

- taking the necessary actions to prevent unauthorized persons from entering the construction site;
- ensuring that construction works are carried out using products in accordance with the law;

4) suspending construction works in the event of identifying a potential hazard and immediately notifying the relevant authority;
5) notifying the investor of an entry in the construction log concerning the suspension of construction works due to their performance not being in accordance with the design;
6 implementing recommendations entered in the construction log;
7) reporting to the investor for inspection or acceptance of completed works that are being covered up or disappearing and ensuring that tests and checks of installations, technical devices and chimney flues required by regulations or specified in the agreement are carried out before reporting the construction object for acceptance;
8) preparing as-built documentation of the construction object;
9) reporting the construction object for acceptance with an appropriate entry in the construction log and participating in acceptance activities and ensuring that any identified defects are removed (Ustawa z dnia 7 lipca 1994 r. Prawo budowlane).

The basic obligations of the ***owner*** or ***manager of a building*** include:

1) maintaining and using the building in accordance with the law;
2) ensuring safe use of the building, and in particular in the event of external factors affecting the building, related to human activity or forces of nature, such as: lightning, seismic shocks, strong winds, heavy atmospheric precipitation, landslides, ice phenomena on rivers and the sea, lakes and reservoirs, fires or floods, as a result of which damage to the building occurs or a direct threat of such damage occurs, which may pose a threat to human life or health, property safety or the environment;
3) carrying out periodic inspections and documenting them (Ustawa z dnia 7 lipca 1994 r. Prawo budowlane).

Maintaining work safety during the implementation of a construction project is the responsibility of all its participants, at all its stages (Obolewicz, 2017, 2018, 2020, 2021a, 2021b, 2022; PIP. Nieprawidłowości na polskich

placacH budów, 2024; Runkiewicz, Sieczkowski, 2019; Stowarzyszenie Międzynarodowych Ekspertów Budowlanych, Jak uniknąć najczęstszych błędów w projekcie budowlanym? – Porady ekspertów, 2024).

At the stage of *preparing a construction investment*, the level of safety is determined by the decision of the investor choosing the designer, the health and safety coordinator and the contractor. The investor should make this decision as early as possible, because the time gained gives the opportunity to discuss the investment project and ensure that, to the extent possible, the documentation and organization of the works ensure maximum safety.

At the stage of *implementation of a construction investment* (construction), the level of safety is determined by the quality of construction management. Construction management (construction manager, works managers) should ensure that the works are planned, organized, controlled, monitored and supervised in such a way as to ensure the required level of work safety. All persons participating in the construction should be trained and have the appropriate competences. Construction workers should be able to consult on issues related to occupational health and safety. The actions of various employers (subcontractors) conducting works should be coordinated and construction workers should be able to consult on health and safety issues. The coordinator of all works of the construction process, including issues related to work safety, is the construction manager.

At the stage of *use (operation) of a building*, the owner or manager of the building is responsible for matters concerning the building. He is obliged to:

- maintain and use the building in accordance with its intended purpose,
- ensure safe use of the building, in particular in the event of external factors affecting the building, related to human activity or forces of nature,
- subject building objects to periodic inspections (annual, five-yearly) in accordance with legal requirements.

Errors in the implementation of construction investment projects occur throughout the entire life cycle of a building (preparation, implementation, use and liquidation) and result primarily from:

- insufficient understanding of the needs assigned to a specific construction project;
- lack of realistic budgeting of the entire project;

- lack of communication and proper understanding between the participants of the project implementation process;
- improper selection of the design team;
- lack of appropriate supervision and control;
- ignoring construction regulations and standards,
- insufficient planning and analysis of conditions;
- ambiguities in the documentation of individual stages and phases of the process;
- insufficient qualifications and skills of investors, investor supervision inspectors, designers, contractors and owners / managers of the building (Biuro projektowe KLAB Engineering – 5 błędów Inwestora na etapie projektowania, 2023).

Examples of the most common errors in individual process stages are presented in Table 2.

Tab. 2. Typical errors occurring at individual stages of the construction investment process

No.	Stages	Typical errors occurring at each stage of the process
1	**Stage I.** Preparation of the investment for implementation	1. improper spatial planning, 2. failure to adapt the project to climatic conditions, 3. failure to take into account applicable regulations and standards in planning and design, 4. ill-considered functional and aesthetic aspects of the designed facilities, 5. improper construction assumptions, improper assumption of loads (value, direction, time of impact), static scheme, geotechnical conditions and material solutions, 6. ambiguities in the assessment of ground and hydrotechnical conditions, 7. insufficient inter-industry cooperation, 8. inaccuracies in technical drawings / lack of detailed drawings in the design documentation, 9. lack of drawing solutions and calculation justifications (calculation errors), 10. failure to prepare opinions or expert opinions used during the design and verification of the project.

No.	Stages	Typical errors occurring at each stage of the process
2	**Stage II.** Investment implementation – construction of a building	**Earthworks:** 1. insufficient soil testing before starting the works, 2. inappropriate technology for carrying out the works, 3. improper securing of the excavation against atmospheric factors, e.g. drainage of rainwater, 4. undermining of foundations, 5. lack of securing of excavations, 6. lack of supervision or insufficient supervision of the works carried out.
		Foundation works: 1. improper preparation of the substrate, 2. lack of insulation or improperly executed insulation, 3. use of inappropriate materials, 4. incorrect dimensions and levels of foundations.
		Concrete, reinforced concrete, masonry works: 1. use of improper execution technologies, 2. failure to maintain design dimensions, lack of plumb lines and levels, 3. incorrect connections of structural elements, 4. use of defective building materials, 5. lack of expansion joints, proper insulation, 6. collisions with installations, 7. lack of or insufficient supervision of construction works.
		General construction works: 1. improper actions – consisting in breach of obligations by participants in the construction process, poor workmanship, 2. violations of regulations regarding the use of construction products, 3. failure to comply with the construction technology, 4. deviations from the construction design, 5. carrying out works without a building permit, 6. random events occurring in the process of carrying out construction works.

No.	Stages	Typical errors occurring at each stage of the process
3	**Stage III.** Use (operation) of the building	1. use of a building object contrary to its intended purpose, 2. illegal change of the method of use of a building object or its part, 3. illegal reconstruction of a building object, 4. allowing a building object to become in poor technical condition, 5. failure to perform periodic inspections (or improper performance of inspections) of a building object, 6. failure to take the required actions by the owner or manager resulting from periodic inspections of the building object, 7. failure to take the required actions by the owner or manager resulting from technical studies concerning the building object, 8. failure to perform obligations by the owner or manager resulting from the actions of construction supervision authorities, 9. improper use of the object: • overloading of structural elements (e.g. ceilings due to the installation of suspended ceilings, as well as overloading with snow and grain), • technical wear and tear of structural wooden elements and their damage due to biological erosion (e.g. wooden elements of the roof truss structure), • fatigue of materials, i.e. products from which they were made (e.g. weathered bricks, plaster defects, crumbling joints), • lack of protection of gable walls after the demolition of the neighbouring building, • unauthorized dismantling of structural elements, • washing out of structural elements in water construction, • impact of mining exploitation and lack of protection against mining exploitation, • unauthorized reconstruction of internal installations, especially gas installations.
4	**Stage IV**. Liquidation of the investment	1. lack of diagnostics of the building structure, 2. improper performance of renovation and demolition works, 3. errors during the performance of renovation works (e.g. operating error during the performance of works with mechanical equipment causing dynamic impact of heavy automotive equipment – vibrations, incorrect installation of the suspended ceiling, lack of anchoring of ceiling beams, lack of proper stiffening – gable wall) 4. improper anchoring of scaffolding.

Source: Kajfasz, 2006, 2021; Hotała F, Rykaluk, Hotała, 2011; Kuchta, Tylek, Rawska-Skotniczny, 2017; Runkiewicz, Sieczkowski, 2019; Kiec, 2022; Biuro projektowe KLAB Engineering – 5 błędów Inwestora na etapie projektowania, 2023; Chudzicki, Gajda, 2023; PIP. Sprawozdania z działalności Państwowej Inspekcji Pracy w latach 2019-2023; Ciekanowski, 2024; PIP, 2024; Stowarzyszenie Międzynarodowych Ekspertów Budowlanych, Jak uniknąć najczęstszych błędów w projekcie budowlanym? – Porady ekspertów, 2024

3.6. Summary

The implementation of a construction project is a complex process in which every decision of the investor, construction supervision inspector, designer, contractor or manager of the building has a significant impact on the final result, including work safety during the implementation of the construction project. Errors made at the preparation, implementation, use and liquidation stages of the investment can lead to serious consequences, both financial and structural. Therefore, it is crucial that all participants in the implementation process are well prepared, aware of the potential challenges and actively involved in the entire implementation process. In this way, they can significantly increase the chances of a safe implementation process.

Each construction investment brings unique challenges and opportunities. By making rational decisions, based on solid knowledge and cooperating with each other during the implementation of the project, individual participants can transform their visions, which in the end will allow to obtain functional construction objects: buildings, structures, small architectural objects, which will serve users for years. It should be remembered that the success of work safety during the implementation of the construction project depends on harmonious cooperation and mutual understanding between all parties involved, and it is important to identify signals, events and symptoms of signs, symptoms, indicators that affect work safety and health protection during the process of implementing the construction project, in order to subsequently build a repository of data characterizing work safety and health protection of a given project and have an impact on shaping safe and hygienic working conditions during the implementation of subsequent stages of the process. More and more entities participating in the process of implementing construction projects are interested in taking systematic actions to improve the state of occupational safety and health protection throughout the life cycle of a building and in subsequent new projects. The effectiveness of these actions requires that they be carried out within the framework of the procedure developed for the needs of the project. This results primarily from the fact that a properly designed system is the most effective way to ensure the required level of occupational safety. Management science systems, including occupational safety management, which include the organizational structure, planning, responsibility, rules of conduct, procedures, processes and resources needed to develop, implement, implement, review and maintain the appropriate level

of occupational safety and health at all stages of the investment process in construction, can be helpful in this action.

Bibliography

1. Alidi A. S. (1996) Use of the analytic hierarchy process to measure the initial viability of industrial projects. International journal of project management, 14(4)
2. Arboleda C., Abraham D. (2004) Fatalities in Trenching Operations – Analysis Using Models of Accident Causation, Journal of Construction and management, ASCE March-April/2004
3. Babichenko J.S., Babichenko S.I. (2008) Analysis and modelling of work-related stress determinants in cross-cultural context. Transformations in Business & Economics no 7, 3/15
4. Barling G. Loughlin, Kelloway K. (2002) Development and test of a model linking safety – specific transformational leadership and accupational safety, Journal of Applied Psychology, vol. 87
5. Baron-Puda M. (2009) Określanie kosztów pracy na przykładzie przedsiębiorstwa produkcyjnego. Zarządzanie Przedsiębiorstwem, Polskie Towarzystwo Zarządzania Produkcją 1
6. Bartusik K. (2008) System zarządzania BHP jako narzędzie doskonalenia organizacji przedsiębiorstwa. Kraków: Uniwersytet Ekonomiczny w Krakowie. Zeszyty Naukowe 2008
7. Baryłka A. (2018a) Poradnik rzeczoznawcy budowlanego. Tom I – Problemy techniczno-prawne diagnostyki obiektów budowlanych, ISBN 978-83-944607-5-4
8. Baryłka A. (2018b) Okresowe kontrole obiektów budowanych w procesie eksploatacji, ISBN 978-83-944607-7-8
9. Baryłka A., Obolewicz J., Kisiel H. (2020) O normativno-pravovyh podhodah k èkspluatacionnym harakteristikam stroitel′nyh ob″ektov v Respublike Pol′ša
10. Basta M., Cendrowska A., Kapczyńska L., Marciniak G., Rupniewska E., Strzelecka H. i wsp. (2008) Zasady metodyczne statystyki rynku pracy I wynagrodzeń. Warszawa, GUS
11. Basu R. (2004) Implementing quality: a practical guide to tools and techniques: enabling the power of operational excellence: Cengage Learning EMEA

12. Bednarski A. (1998) Zarys teorii organizacji i zarządzania, TNOIK, Toruń ss.471
13. Bednarski A., Szlendak J. (1997) Wprowadzenie do teorii organizacji i zarządzania. Toruńska Szkoła Zarządzania, Toruń
14. Biała księga procesów inwestycyjnych na polskich drogach i liniach kolejowych (2006) Magazyn Autostrad 6
15. Biuro projektowe KLAB Engineering (2023) 5 błędów Inwestora na etapie projektowania
16. Błachut K., Nikitiuk H., Nowak B., Rybka J., Tiukało A. (2007) Przedsięwzięcie budowlane. Poradnik inwestora, Grupa Wydawnicza Marciszewski, Wrocław
17. Brenner L. (1975) Accident Investigations – multilinear evens sequencing methods, Journal of Safety Research no 7/1975
18. Bryan Lawson (2013) Design and the Evidence, Procedia – Social and Behavioral Sciences 105/2013
19. Carter G., Smith S.D. (2006) Safety Hazard Identification on Construction Projects Journal of Construction Engineering and Management February
20. Chen-Yu Chang (2013) A critical analysis of recent advances in the techniuques for the evaluation of renewable Energy projects, International Journal of Project management no 31/2013
21. Chua D. K. H., Goh Y. M. (2004) Incident Causation Model of Improving Feedback of Safety Knowledge, Journal of Construction Engineering and Management, ASCE July-August/2004
22. Chudzicki M., Gajda G. (2023) Odpowiedzialność projektanta za wady projektu budowlanego, Przewodnik Projektanta 2/2023 (e-wydanie)
23. Ciekanowski Z. (2024) Rodzaje i źródła zagrożeń bezpieczeństwa, Wyższa Szkoła Zarządzania i prawa im. Heleny Chodkowskiej w Warszawie
24. Czaputowicz J. (1998) System czy nieład? Bezpieczeństwo europejskie u progu XXI wieku, WNPWN, CSM
25. Ejdys J. (2010) Kształtowanie kultury bezpieczeństwa i higieny pracy w organizacji, Oficyna Wydawnicza Politechniki Białostockiej, Białystok 2010
26. Ejdys J., Lulewicz A., Obolewicz J. (2008) Zarządzanie bezpieczeństwem w przedsiębiorstwie, Wydawnictwo Politechniki Białostockiej, Białystok 2008

27. Facts nr 55/2003 (2003), Osiąganie wyższego poziomu bezpieczeństwa i ochrony zdrowia w budownictwie, FACTS nr 55, Europejska Agencja Bezpieczeństwa i Zdrowia w Pracy, 2003
28. Fröderberg M., The human factor in structural engineering: A source of uncertainty and reduced structural safety. Lund University 2014
29. Geller E.S. (1996) The psychology of safety, Chlinton Book Company, Radmor, Pensylvania
30. Glendon A. I., Stanton N.A. (2000) Perspectives of safety culture, Safety Science, vo. 34 no 1-3
31. Global Strategy on Occupational Safety and Health (2004) International Labour Organization, Genewa
32. Guldenmund F. (2000) The nature of safety culture: a review of theory and research, Safety Science 2000 vol.34, no1-3
33. GUS, Dane wstępne GUS za 2024 r.
34. Hotała E., Rykaluk K., Hotała P., Zagrożenie awaryjne stalowej konstrukcji hali wskutek błędów projektowych i wykonawczych. XXV Konferencja Awarie Budowlane 2011
35. Jacewicz A. R. (2006) Inwestycje budowlane celu publicznego. Zasady dobrego przygotowania inwestycji, pozwalającego na staranie się o dofinansowanie z funduszy Unii Europejskiej, cz.1-7, WACETOB 3-10
36. Jermołowicz P. (2021) Błędy i przyczyny awarii, Inżynieria Środowiska https://Inzynieriasrodowiska.com.pl
37. Kajfasz S., Po katastrofie hali MTK w Katowicach – wybrane problemy i uwagi, Inżynieria i Budownictwo 12/2006
38. Kiec T. (2022) Usterki i błędy w procesie budowlanym – Inżynier budownictwa 7-8/2022
39. Klamut R. (2012) Bezpieczeństwo jako pojęcie psychologiczne, Zeszyty Naukowe Politechniki Rzeszowskiej nr 286, Ekonomia i nauki humanistyczne, z.19 4/2012
40. Kołodziński E. (2006) Przygotowanie zawodowe osób funkcyjnych odpowiedzialnych za zarządzanie bezpieczeństwem cywilnym regionu. IV Międzynarodowa Konferencja Naukowa" Zarządzanie Kryzysowe", Szczecin
41. Kołodziński E. (2007) Wprowadzenie do zarządzania bezpieczeństwem, Uniwersytet Warmińsko-Mazurski w Olsztynie

42. Kołodziński E. (2010) Wprowadzenie do zarządzania bezpieczeństwem, Materiały Uniwersytetu Warmińsko-Mazurskiego w Olsztynie
43. Kopaliński W. (1992) Słownik Przypomnień Władysława Kopalińskiego, wyd. Wiedza Powszechna, 1992
44. Korzeniewski W. (2005) Niespójne przepisy prawa budowlanego obniżają jego skuteczność, Inżynier budownictwa 3
45. Kowalski J. (1999) Podstawy prawne ochrony pracy w Polsce, w: Bezpieczeństwo pracy i ergonomia, red. Nauk. D. Koradecka, Warszawa, CIOP
46. Kowalski J., Krzyśków B. (2000) Procesy pracy, pojęcia podstawowe, geneza idei ochrony pracy, Nauka o pracy – bezpieczeństwo, higiena, ergonomia, red. naukowa D. Koradecka, Wyd. Centralny Instytut Ochrony Pracy, Warszawa
47. Krupa A. (2005) Przygotowanie dokumentacji projektowej na potrzeby zamawiania robót budowlanych. WACETOB 11
48. Kuchta K., Tylek I., Rawska-Skotniczny A. Przyczyny i metody zapobiegania błędom ludzkim w inżynierskiej działalności budowlanej. Część I: Klasyfikacja i źródła błędów
49. Kumał J. (1970) Zarys teorii organizacji i zarządzania, PWE, wyd. II, Warszawa
50. Kieżun W. (1977) Podstawy organizacji i zarządzania. Książka i Wiedza, wyd. I, Warszawa
51. Mearns K.J., Flin R. (1999) Assessing the state of organizational safety – culture or climate? Current Psychology, vol. 18 no 1/1999
52. Mierczyk Z., Szcześniak Z., Zygmunt M., Gietka A. D., Knysak P., Pieńsko B., Wojtanowski J. (2013) Nowe rozwiązanie technicznego systemu zabezpieczającego schronowe układy wentylacyjne, Wiadomości Elektroniczne, z.10/2013
53. Milczarek M. (2000) Kultura bezpieczeństwa w przedsiębiorstwie – nowe spojrzenie na zagadnienia bezpieczeństwa pracy, Bezpieczeństwo pracy nr 10
54. Milczarek M. (2001) ocena poziomu kultury bezpieczeństwa w przedsiębiorstwie, Bezpieczeństwo pracy nr 5/2001
55. Milczarek M. (2002) Kultura bezpieczeństwa pracy, wyd. CIOP, Warszawa
56. Mullen J. (2004) Investigating factors that influence individual safety behawior at work, Journal of Safety Research, vo. 35, no 3

57. Obolewicz J. (2012) Uwarunkowania bezpieczeństwa i ochrony zdrowia budowy. cz.1, Praca i Zdrowie nr 10/2012
58. Obolewicz J. (2016) Uwarunkowania techniczne, organizacyjne, bezpieczeństwa i ochrony zdrowia budowlanych obiektów antropogenicznych, Logistyka nr 1/2016
59. Obolewicz J. (2017) Zagrożenia zdrowia i życia w środowisku pracy, Inżynieria Bezpieczeństwa Obiektów Antropogenicznych
60. Obolewicz J. (2018) Demoskopia bezpieczeństwa i ochrony zdrowia przedsięwzięć budowlanych, Wyd. Oficyna Wydawnicza Politechniki Białostockiej, Białystok
61. Obolewicz J. (2020) Safety and health protection (s&hp) in managing construction projects, Inżynieria bezpieczeństwa obiektów antropogenicznych nr 1(2020)
62. Obolewicz J. (2021a) Poradnik inżynierii bezpieczeństwa pracy przedsięwzięć budowlanych, Wyd. Centrum Rzeczoznawstwa Budowlanego, Warszawa
63. Obolewicz J. (2021b) Zarządzanie projektem, Webinarium Polskiego Stowarzyszenia Rzeczoznawców i Biegłych Sądowych MANS
64. Obolewicz J. (2022) Proces inwestycyjny w budownictwie / Investment process in construction, Webinarium Polskiego Stowarzyszenia Rzeczoznawców i Biegłych Sądowych MANS Łomża
65. Pęciłło M. (2005) Skuteczność procesów zarządzania bezpieczeństwem i higieną pracy a korzyści ekonomiczne przedsiębiorstwa, Bezpieczeństwo pracy 2005, nr 11(410)
66. Pidgeon N. F. (1999) Safety culture and risk management in organizations, Journal of Cros-Cultural Psychology, vol. 22 no. 1(1991)
67. PIP (2024) Nieprawidłowości na polskich placach budów
68. PIP. Sprawozdania z działalności Państwowej Inspekcji Pracy w latach 2019-2023, Warszawa, www.pip.gov.pl
69. PIP. Sprawozdanie z działalności Państwowej Inspekcji Pracy w 2023 roku, Warszawa, www.pip.gov.pl
70. Połoński M. (2008) Proces inwestycyjny i eksploatacja obiektów budowlanych. Praca zbiorowa. Wyd. SGGW
71. Połoński M., Kowalski J. (2016) Problemy na etapie uzgadniania dokumentacji projektowej inwestycji kolejowych realizowanych z zastosowaniem Warunków Kontraktowych FIDIC. Materiały Budowlane. 6/2016,

72. Połoński M., Pawluk K., Rybka I. (2017) Optimization model for the design of multi-layered permeable reactive barriers . IOP Conference Series: Materials Science and Engineering 2017, Vol. 245, art. 072017
73. Rakowska A. (2013) Kultura bezpieczeństwa w przedsiębiorstwie. Modele, diagnoza i kształtowanie, wyd. CeDeWu.pl, Warszawa 2013
74. Reason J., Human Error, Cambridge University Press, New York 1990
75. Rigby L.V., The Nature of Human Error, Annual Technical Conference Transations of the ASQC. American Society for Quality Control, USA 1970
76. Runkiewicz L., Sieczkowski J. (2019) Najczęściej popełniane błędy w projektowaniu konstrukcji budowlanych, Przegląd budowlany 5/2019
77. Stańczyk J. (1996) Współczesne pojmowanie bezpieczeństwa, ISP PAN, Warszawa
78. Stelmach W. (2008) Jeszcze raz, ale inaczej, o teorii Maslowa, Journal of Management and Business Administration. Central Europe 4/2008
79. Stowarzyszenie Międzynarodowych Ekspertów Budowlanych, Jak uniknąć najczęstszych błędów w projekcie budowlanym? – Porady ekspertów, https://szkodywbudownictwie.pl
80. Szcześniak Z., Krzewiński R., Pieńko B., Urbanowicz G. (2012) Wpływ ukształtowania terenu na oddziaływanie awaryjnego wybuchu w składzie materiałów wybuchowych, Inżynieria Bezpieczeństwa – Ochrona przed skutkami nadzwyczajnych zagrożeń -2012, Wojskowa Akademia Techniczna im. Jarosława Dąbrowskiego, Warszawa
81. Szcześniak Z., Pieńko B. (2010) Ochrona przed skutkami nadzwyczajnych zagrożeń, Wojskowa Akademia Techniczna im. Jarosława Dąbrowskiego, Warszawa
82. Szcześniak Z., Pieńko B., Kozera M. (2013) Inżynieria Bezpieczeństwa, Wojskowa Akademia Techniczna im. Jarosława Dąbrowskiego, PHU, ARPOL, Zielona Góra
83. Szcześniak Z., Zieliński K. (2012) Rozwiązania schronowe jako element inżynierii bezpieczeństwa w zadaniach ochrony ludności i obrony cywilnej. Referat na XXVI Międzynarodowej Konferencji Naukowo-Technicznej pt. Inżynieria Bezpieczeństwa – Ochrona ludności przed skutkami nadzwyczajnych zagrożeń „Ekomilitaris 2012”, Zakopane
84. Szlendak J. Obolewicz J (2002) Podstawy organizacji, zarządzania i pracy kierowniczej, Olecko Wszechnica Mazurska
85. Szlendak J., Obolewicz J. (2005) Podstawy zarządzania i zachowań organizacyjnych, Wydawnictwo Wszechnicy Mazurskiej w Olecku

86. Szubert W. (1966) Ochrona pracy. Studium społeczno-prawne, Warszawa
87. Tytyk E. (2001) Projektowanie ergonomiczne, Wydawnictwo Naukowe PWN SA, Warszawa – Poznań
88. Tytyk E. (2002) Ergonomia – pojęcia podstawowe, Nauka o pracy – bezpieczeństwo, higiena, ergonomia, red. naukowa D. Koradecka, Wyd. Centralny Instytut Ochrony Pracy, Warszawa
89. Ustawa z dnia 26 czerwca 1974 r. Kodeks pracy
90. Ustawa z dnia 7 lipca 1994 r. Prawo budowlane
91. Zieleniewski J. (1979) Organizacja i zarządzanie, PWN, wyd. VI, Warszawa

УДК 624.155.152
Дослідження процесу занурення металевих штампів та бетонних блоків
у ґрунт для зведення нульового циклу будівель

Volodymyr Panteleenko[1], Oleksandr Holubchenko[1], Serhii Karpushyn[2], Viktor Slon[3]
[1,2,3] Cand. Sc. (Tech), Assoc. Prof.
[1] Ukrainian State University of Science and Technologies, ESI «Prydniprovska State Academy of Civil Engineering and Architecture», Dnipro, 49000, Ukraine.
[2] Central Ukrainian National Technical University, Kropyvnytskyi, 25000, Ukraine.
[3] Kherson State agrarian and ekonomic University, Kropyvnytskyi, 25000, Ukraine.
https://orcid.org/0000-0001-5651-8616, email: vladimirpanteleenko49@gmail.com
https://orcid.org/0000-0003-2971-1263, email: alexgol@ua.fm
https://orcid.org/0000-0001-9035-9065, email: karp22.05.1972ksa@gmail.com
https://orcid.org/0000-0001-5535-0794, email: viktor.ukrain2015@gmail.com

4. RESEARCH INTO THE PROCESS OF IMMERSING METAL STAMPS AND CONCRETE BLOCKS INTO THE SOIL FOR THE CONSTRUCTION OF ZERO-CYCLE BUILDINGS

Abstract

The materials of the monograph present the results of research into the processes of compacting discrete excavations for individual foundations with metal stamps with conical nozzles and the results of immersion of conical truncated concrete hollow blocks into the soil under static and dynamic

loading. The results of laboratory and field experimental studies are presented, and the interaction of stamps and concrete hollow blocks with the soil base is simulated in the SolidWorks software package.

To clarify the qualitative regularities and physical essence of the process of immersion of conical blocks, a laboratory stand developed by the authors was used. It was established that the compacted zone, which is formed as a result of immersion of various elements in the form of a truncated cone into the soil, has the shape of an ellipsoid of rotation, is heterogeneous in its structure and consists of several areas with different densities, geometric sizes and shapes. For the first time, the physical essence of the process of immersion in the soil of large-section building elements has been established, which consists in the peculiarities of the formation of a compacted zone depending on the depth of immersion, the design of the immersed element, and soil conditions.

Modeling the interaction of stamps and concrete hollow blocks with the soil base in the SolidWorks software package allowed us to establish the nature of the stress-strain state of the building elements immersed in the soil. This allows us to reasonably approach the choice of material and geometric parameters of the immersed building elements.

Keywords: stamp, foundation-shell, soil, load, stress, density, immersion, stand, model, deformation, core, subsidence soil.

4.1. Introduction

Significant development in construction has been received by foundations in stamped recesses and foundations based on concrete blocks that are immersed in the soil [1-6].

Widely used monolithic foundations for building columns, along with known advantages, are characterized by high labor intensity and duration of erection at the construction site and have a rather large need for building materials. The use of prefabricated stepped foundations of existing structures leads to some reduction in labor intensity at the construction site, but their cost and steel consumption increase significantly compared to monolithic foundations.

One of the possible ways to improve the process of arranging foundations for frame or frameless buildings of small storeys is the use of metal hollow

stamps and thin-walled spatial conical truncated concrete blocks (foundation shells) for their construction.

When stamping depressions in the upper part of the soil base, or when immersing concrete blocks using special equipment, a compacted soil zone with increased strength indicators is formed under and around them, due to which its bearing capacity is significantly increased.

The use of this foundation construction technology allows you to reduce the volume of excavation work by 3...4 times, almost completely eliminate formwork work compared to conventional columnar foundations, reduce concrete consumption by 2...2.5 times, metal by up to 2 times, labor costs and the estimated cost of zero-cycle work by 40% [2, 4, 6].

However, the process of immersing stamps and concrete blocks has not been studied well enough in terms of interaction with the soil and the effective use of various equipment for their immersion. The physical conditions of the immersion process have been poorly studied, in particular, the influence of various factors of pile driving equipment on the effectiveness of the immersion process.

The purpose of the research is to establish the features of the stress-strain state of the soil base and the metal stamp or concrete foundation shell under the conditions of their contact interaction during immersion by static or dynamic methods.

Achieving the set goal will allow a reasonable approach to the assignment of the dimensions and material of the elements of this contact pair.

4.2. Identification of the physical essence of the process of immersing models of stamps and blocks into the soil base

4.2.1. Purpose and methodology of laboratory research

The purpose of experimental research is to clarify the physical essence of the process of immersing stamps and concrete blocks into the soil base in laboratory conditions.

To achieve the set research goal, it is necessary to determine the conditions of physical modeling, develop and manufacture a stand and models of stamps and blocks for studying the immersion process in laboratory conditions.

The conditions of physical modeling of the process of immersion of shells and stamps are as follows (Borshch, V. S., Panteleienko, V. I., & Karpushyn, S. O. 2019):

- the defining criteria for the similarity of the process of immersion in the soil for the models and the original must be equal;
- the same physical parameters for the model and the original must be proportional;
- the process of interaction with the environment of the model and the original must belong to the same class of phenomena;
- the model and the original as a whole should be geometrically similar.

The task of conducting an experiment to establish the physical essence of the immersion process can be simplified. As the main parameter that determines the similarity of the soil in terms of strength, it is quite permissible to use a conditional indicator that is a functional dependence on the main parameters (Panteleienko, V.I., Karpyshyn, S.O. 2022; Panteleienko, V. I., Karpushyn, S. O., & Chervonoshtan, A. L. 2023; Vynnykov, Yu. L. 2016). As such a conditional indicator, you can use the number of impacts of the dynamic density meter ДорНДІ, C_{sh}. Meeting the requirements for similarity by such a generalizing indicator as C_{sh} ensures a close similarity of physical processes occurring in natural conditions and during modeling.

4.2.2. Scheme of the stand for laboratory research

The stand for establishing the physical essence of the process of immersion in the soil of models of stamps and concrete blocks (Shvets, V. B., Boiko, I. P., Vynnykov, Yu. L., Zotsenko, M. L., Petrakov, O. O., Shapoval, V. H., Bida, S. V. 2012; Hudenko, A. M., & Hlavatskyi, K. Ts. 2015) (Fig. 1.1) includes a soil container 1, the front wall 2 of which is made of transparent material for observing the process of deformation of the soil base as the model 3 is immersed. Above the container 1, a rack 4 with guides 5 and 6 for the pressure rod 7 is mounted. The rod 7 has the ability to move vertically using blocks 8 and 9 and an electric motor 10. The immersion force is transmitted through the head 11 to the model 3 and then to the soil base.

The immersion of the models in the stand is carried out as follows. After preparing the base (layer-by-layer compaction of the simulated soil and creation of colored layers), the model 3 is installed on the soil base so that its

vertical cutting plane fits tightly against the transparent wall 2. Then the rod 7 is installed on the headstock 11. Then, using blocks 8 and 9 and the electric motor 10, the force is transmitted through the rod 7 and the headstock 11 to the model 3, which is immersed in the soil, tightly contacting the transparent front wall 2.

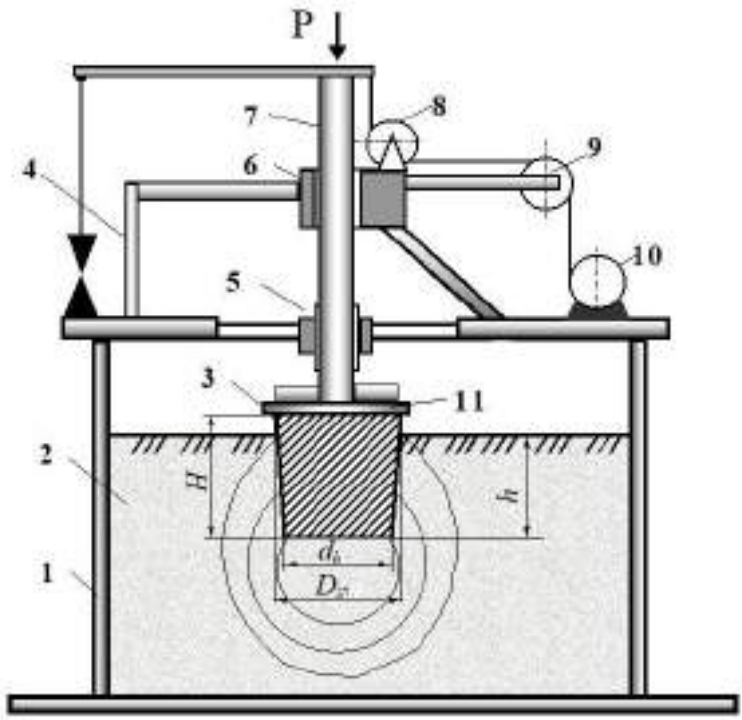

Fig. 1. Structural diagram of a laboratory stand for studying the physical essence of the process of immersing stamps and concrete blocks into the soil.

Source: results of the authors' own research.

Immersion of models (Fig. 2) into the soil of a layered painted structure provides observation of the formation of a compacted zone and the spread of soil deformation along the depth of immersion.

Technical characteristics of an experimental, laboratory stand for studying the process of immersion of models of stamps and concrete blocks into the soil.

Overall dimensions of the soil container, mm:

– length, mm 500

– width, mm 450

– height, mm 1125

– rod stroke, mm 200

– stand weight, kg 64.

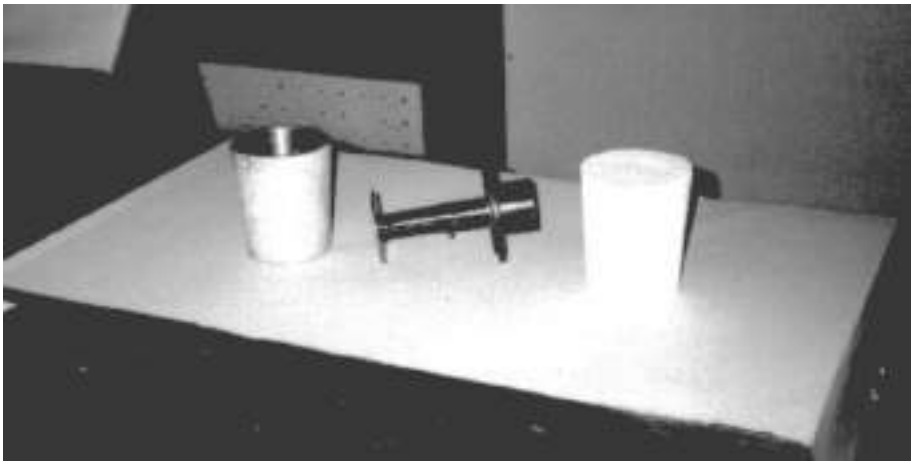

Fig. 2. Models of a stamp and a concrete block on a scale of 1:10

Source: results of the authors' own research.

4.2.3. Laboratory tests of the process of immersion of stamp models and concrete blocks

Studies of the process of immersion of stamp models and concrete blocks in the soil were carried out on a stand (Fig. 1.1) in simulated loamy loam and sand. For the convenience of fixing the limits of soil deformation, depending on the depth of immersion, vertical and horizontal lines were applied to the outer side of the glass at a distance of 15...20 mm from each other. The thickness of the poured layer should be such that after its compaction, the layers of chalk were combined with horizontal lines on the glass.

The studies were carried out using stamp models and concrete blocks on a scale of 1:10. (Fig. 3, a) shows photograms of the process of immersion of a conical stamp model.

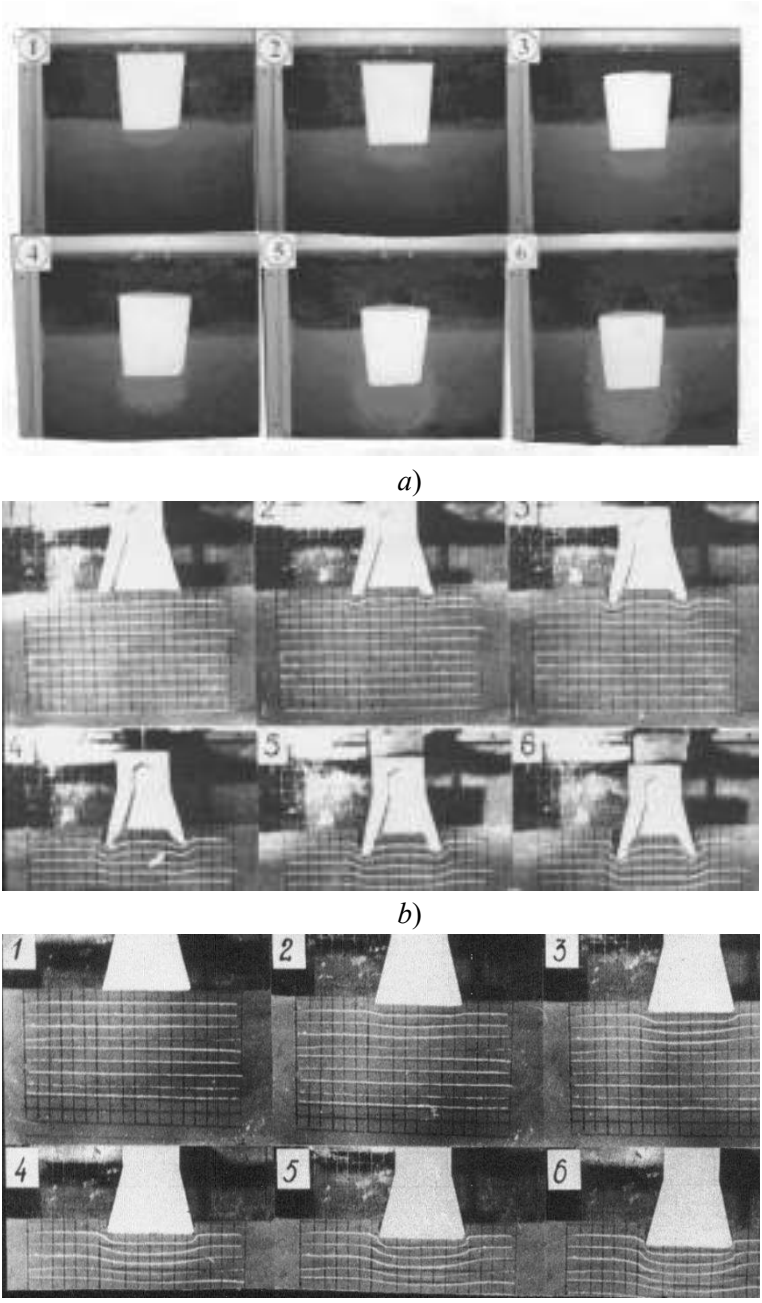

a)

b)

c)

Fig. 3. Photograms of the immersion process: *a)* – conical die model; *b)*, *c)* – block models with annular and solid support area

Source: results of the authors' own research.

The initial stage of immersion corresponds to the deformation of the layers located in the immediate vicinity of the contact surface of the stamp model and concrete blocks with the base soil. With increasing immersion depth, the soil deformation zone increases in width and depth. There is a depth of immersion at which the soil base deformation zone stabilizes both in width and depth, this moment is characterized by the end of the formation of the compacted core.

Further immersion of the stamp is accompanied by the movement of the soil that has accumulated under it in the form of a compacted zone and is its continuation. The compacted zone moves down into the soil base together with the model, displacing soil particles beyond the perimeter of the area of the compacted core that has formed under the sole of the foundation model.

A comparative analysis of the test results of models with an annular support area and solid models allows us to note the following (Fig. *b*, *c*). In the first case, the soil at the beginning of immersion is deformed under the contact area and the deformation lines are located with a convexity upwards, while the internal cavity of the block is filled and a plug is formed in which the soil reaches the highest density (Fig. 3, *b*), later the model is immersed together with the internal soil, and the nature of the deformation changes, the soil layers are deformed with a convexity downwards.

In the second case (Fig. 3, *c*) the soil layers are deformed with a convexity downwards until the formation of the compacted zone is completed.

Thus, laboratory studies using color layers and photograms confirm the assumption that in the process of immersion of stamps and concrete blocks around them and in the base a compacted zone with increased strength characteristics is formed.

4.2.4 Field tests of the process of immersion of hollow concrete blocks (foundation shells)

The order of the research. The research of the process of immersion of shell foundations into soil in the form of a truncated cone (SolidWorks v NTUU KPI im. Sikorskoho) was carried out in the immediate vicinity of the buildings and structures being erected at the construction sites of the cities of Dnepr and Volnogorsk in places characteristic in terms of the geological structure and main characteristics of the soil located within the construction

site. A specially designed stand was used to clarify the qualitative patterns and physical essence of the process of immersion of shells in the form of a truncated cone.

When immersing shells in type II subsidence soils, the soil was soaked. For this purpose, wells with a diameter of 200 mm and a depth twice exceeding the height of the shell with a step of 2 m were drilled around the experimental shell in a radius of 2 m.

The distance between the axes of the experimental shell and the anchor piles should be determined by the dependence $L = 2D$, where D is the diameter of the upper cut of the shell. The wells are connected by drainage trenches and filled with sand or gravel.

The soil resistance during immersion of the shells is determined by the degree of its compaction, the size of the compacted zone, as well as the strength and deformation characteristics of the soil.

The degree of soil compaction depends on the density and moisture content of the natural soils, strength and deformation characteristics, and the area of the lower base of the shells.

As a result of experiments conducted under the conditions of various construction sites, studying the density of loess-like and clayey subsidence soils at the base of the immersed shells, it was found that with an area of the lower base equal to 0,2 m^2 (Fig. 4, *a*), the compacted zone extends to a depth of 0,8 m from the lower edge of the shell. With an increase in the area of the lower base of the shell to 1 m^2, the compaction depth reaches 2,1 m (Fig. 4, *b*).

In its shape, the compacted zone in various soils around the immersed shells approaches an ellipsoid of revolution (Fig.4, *a*, *b*) whose major axis coincides with the vertical axis of the shell. In this case, a significant part of the compacted zone is formed under the base of the shell. This is one of the differences in the formation of the compacted zone compared to piles, in which the area of the lower base is significantly smaller.

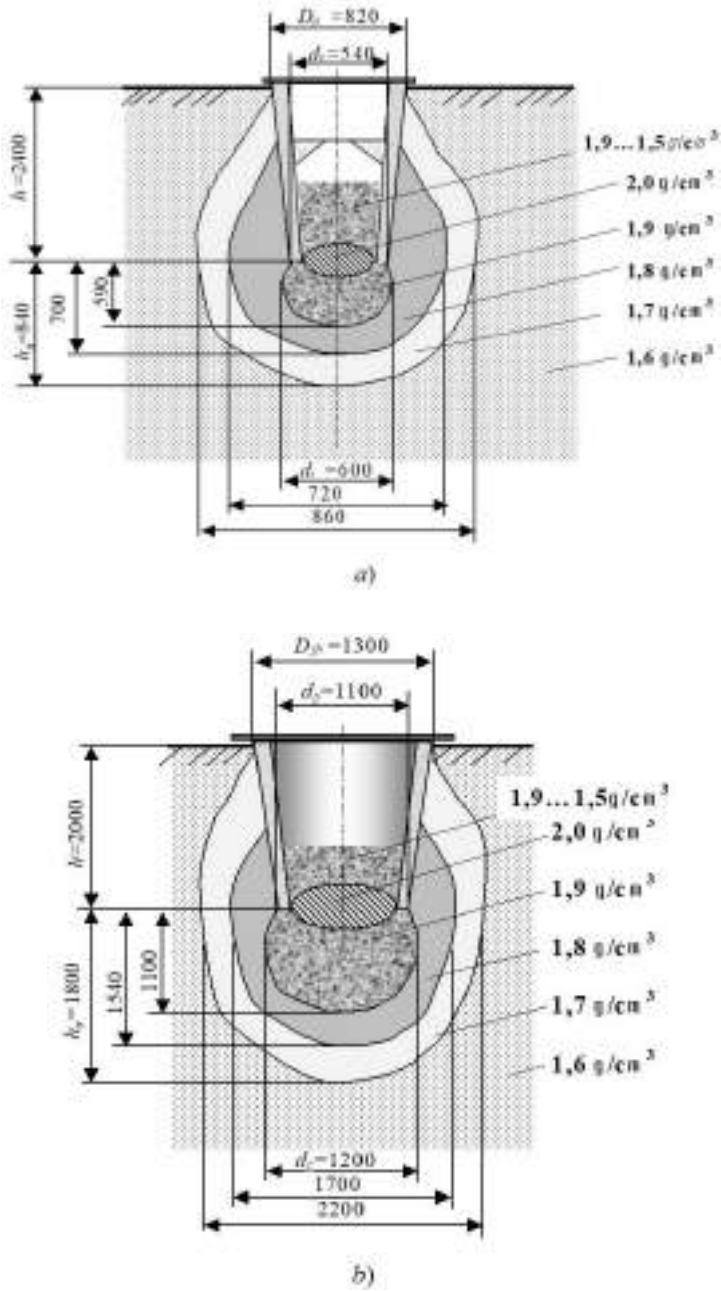

Fig. 4. Formation of a compacted zone during the immersion of conical shell foundations with an open base: *a)* – with a base area of 0,2...0,3 m^2; *b)* – with a base area of 1 m^2 in loess-like loams (Dnepr city).

Source: results of the authors' own research

When immersing shells with an open lower base, the area of which is close to 0,2 m^2 (Fig. 4, *a*), the compacted zone that has formed is characterized by the presence of four areas with different densities: an area with the highest density in the form of an ellipsoid of revolution elongated in a horizontal plane with a density of about 2 g/cm^3 (plug). Below the plug there is an area with a density of 1,9 g/cm^3 (core), it is located directly under the base of the element that is immersed, and is close in shape to a ball, the diameter of which is approximately equal to: $d_c = 1{,}1d_b$, where d_b is the diameter of the shell base. A region with a lower density of approximately 1,8 g/cm^3 adjoins the compacted core with a density of 1,9 g/cm^3 for loams and sandy loams. Next comes an area with a density of about 1,7 g/cm^3, while the density of natural soil can be equal to 1,6...1,5 g/cm^3.

Thus, it was established that in the compacted zone, when elements in the form of a truncated cone with an open lower base are immersed, there are at least four areas with different densities, and the densest area (plug) is partially included in the inner part of this element (Borshch, V. S., Panteleienko, V. I., & Karpushyn, S. O. 2019).

Analysis of the studies showed that when elements with a base area of at least 1 m^2 are immersed in loess-like loams to a depth of 1 m (Fig. 4, *b*), they are compacted and the particles move downwards and to the sides. In this case, a compacted zone is formed with a density from 2,0g/cm^3 in the densest area (plug) to 1,6g/cm^3, a density that corresponds to the natural composition of the soil.

Further immersion of the shell occurs with an increase in the transverse and vertical dimensions of the compacted zone. Upon reaching a depth of 2 m, the dimensions of the compacted zone stabilize, i.e. the process of its formation is completed.

The density of the soil, the dimensions and structure of the compacted zones at the base of the immersed elements, which have a sufficiently large support area at the construction site, were determined using a field laboratory (ПЛЛ-9). The state of the soil after immersion of the element under study and its characteristics were studied to a depth of 4 m under the base of the element and at a distance of 6 m to the side from the vertical axis every 0,5 m (SolidWorks v NTUU KPI im. Sikorskoho).

The compacted zone, which is formed when various elements (shells, blocks, etc.) are immersed in soils composed of sandy loams, is more flattened and elongated to the sides from the vertical axis of the ellipsoid than in a base composed of loams (Fig. 5, *b*). When immersed in loess-like loams, soil

compaction occurs mainly downwards under the base of the element and to a lesser extent to the sides from the vertical axis (Fig. 5, *a*). The dimensions of the densest part of the compacted zone (core) in both cases are approximately equal and are close in shape to a sphere.

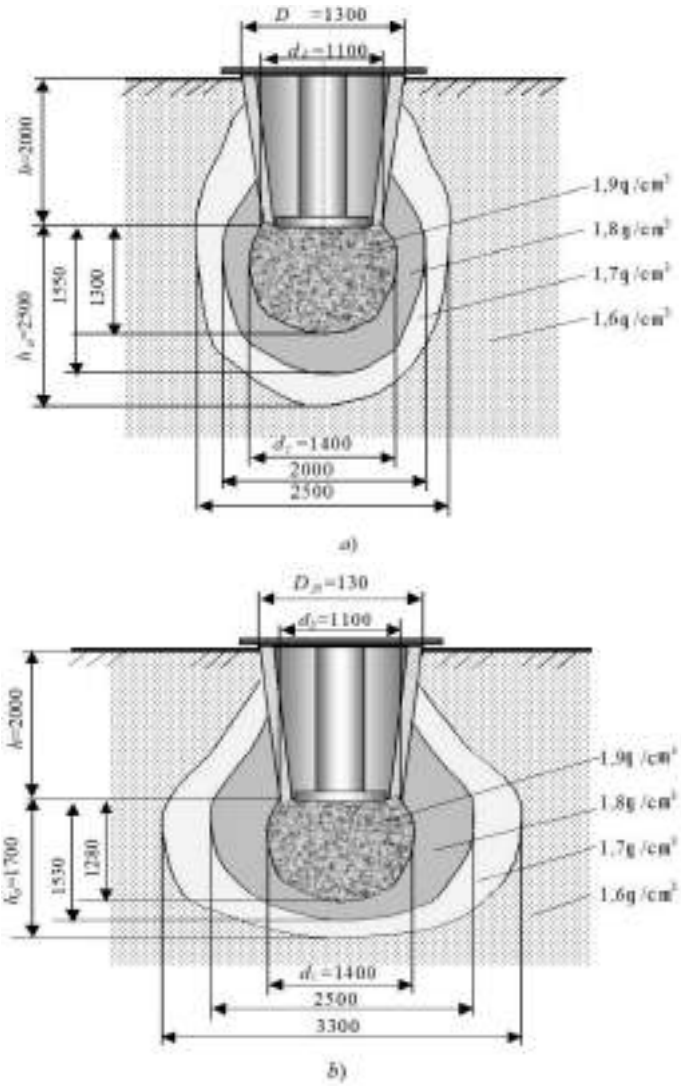

Fig. 5. Formation of a compacted zone during the immersion of shell foundations: *a*) in loess-like loams (Dnepr city); *b*) in hard sandy loams (Volnogorsk city).

Source: results of the authors' own research

In order to increase the bearing capacity of the immersed elements during the construction of the zero cycle of various structures in soils of the I and II subsidence categories, it is necessary to increase the size of the compacted zone under the foundation. For this purpose, experiments were conducted to increase the compacted zone using a locking core (Fig. 5, *a*, *b*), which is a vertical pipe with a tamping plate closing the opening in the base of the shell.

In this case, the formation of the compacted zone begins directly under the base of the shell. In this case, the soil does not get into the inner part, therefore, a plug is not formed, therefore, with this method of immersion, three compaction areas with different densities are formed: a compacted core and underlying areas with a density of 1,9; 1,8; 1,7 g/cm^3, respectively. It should be noted that the diameter of the compacted zone and the core increases. For a compacted core, this dependence will be as follows: d_c=1,3d_b, where d_b is the diameter of the lower base of the shell, which gives an increase in the bearing capacity within 10...15%.

If necessary, in various soils, to increase the bearing capacity, it is advisable to use (Fig. 6) a cone-shaped nozzle. As a result of experiments with various nozzles with an angle at the cone apex equal to 60^0, 70^0, 80^0, 90^0, 100^0, 110^0, 120^0, it was found that the greatest increase in the volume of the compacted zone for dense soils is provided by a nozzle with an angle at the apex equal to 90...95^0, and for subsidence soils 100...110^0 (Fig. 7). At angle values less than 60^0, the compacted core is practically not formed; in this case, the soil particles are displaced to the sides from the vertical axis.

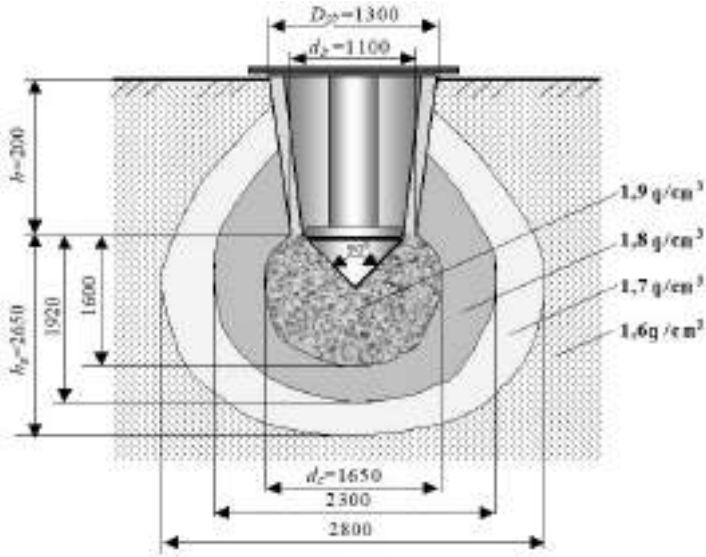

Fig. 6. Formation of a compacted zone during the immersion of shell foundations in loess-like loams (Dnepr City) with a locking core and conical packing

Source: results of the authors' own research

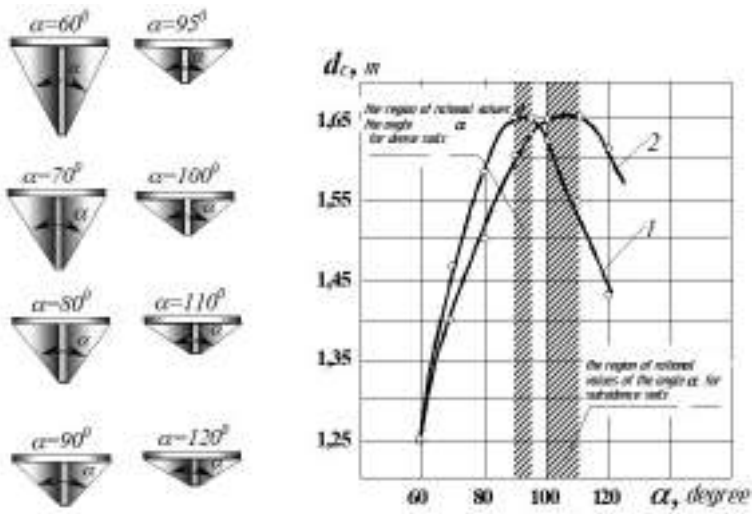

Fig. 7. Designs of cone-shaped packings – *a)*; dependence of the diameter of the compacted core dя on the angle *a* at the top of the cone-shaped packing – *b)*, 1 – for dense soils; 2 – for subsidence soils

Source: results of the authors' own research

At an angle of 90...95^0 for dense soils and 100...110° for subsidence soils, soil particles move downwards and to the sides from the vertical axis, while the geometric dimensions of the core increase and its decompaction is insignificant. In this case, the diameter of the compacted core is determined by the dependence: d_c=1.5d_b, where d_b is the diameter of the lower base of the shell.

It should be noted that when immersing elements with a cross-sectional area of up to 1 m^2 and above, the physical essence of the process, along with general trends for small areas, also has significant differences. The compacted zone is formed not only under the base of the immersed element, but also covers its profile from the sides. Since in this case the compacted zone is quite large, it is non-uniform in density and, as indicated above, consists of at least three or four areas with different densities. It is very difficult to detect such zones when immersing stamps of small cross-section. The immersion of elements with a large cross-sectional area took place in the conditions of the construction site to a depth of up to three meters. It is certain that with further immersion the compacted zone will be transformed towards a change in geometric parameters and shape and redistribution of the volumes of compacted areas. Thus, the immersion of shells to a depth of 2-3 m can be considered the initial stage.

When driving cylindrical conical foundation shells at construction sites in Dnepr and Volnogorsk, which have a different design (Fig. 8) that does not allow the use of a locking core, the formation of a compacted zone has significant differences from the compacted zone formed when driving shells in the form of a truncated cone. In this case, since the lower base of the shell has a diameter that exceeds the diameter of its upper cut, the appearance of zone I is typical, which has the shape of a cylinder inside which the shell is located, as well as zone II (the inner part of the shell not filled with soil). The formation of other areas after filling the internal space occurs directly under the base of the shell, without affecting the lateral surface. The shape of the compacted zone approaches an ellipsoid of revolution somewhat elongated in the horizontal plane for soils representing hard sandy loam. The use of such shells is limited due to the impossibility of using a locking core, which allows, in the case of conical truncated shells, to increase their bearing capacity by increasing the size of the compacted core while reducing the driving forces.

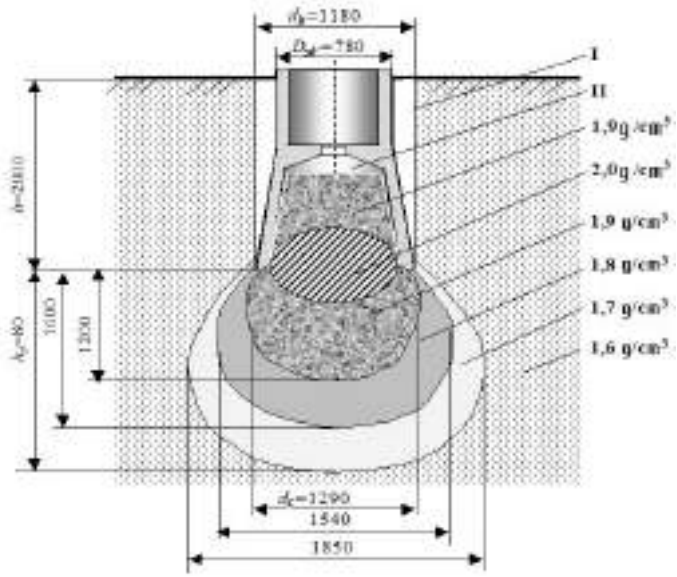

Fig. 8. Formation of a compacted zone during the immersion of conical truncated shell foundations in hard sandy loams (Dnepr city)

Source: results of the authors' own research

The following conclusions can be drawn from the research results:

- the physical essence of the process under study has been established, which consists of the features of the compacted zone formation depending on the method and depth of immersion, as well as the design of the immersed element and soil conditions;
- the compacted zone, which is formed as a result of immersion into the soil of various elements in the form of a truncated cone (stamps, blocks, shells, etc.) has the shape of an ellipsoid of revolution, is heterogeneous in its structure and consists of several areas with different density, geometric dimensions and shape;
- when immersed in sandy loam soils, the compacted zone is more flattened and elongated to the sides from the vertical axis of the ellipsoid than in the base composed of loams. In loess-like loams, soil compaction occurs mainly downwards under the base of the element and to a lesser extent to the sides from the vertical axis, the dimensions of the densest

area of the compacted zone (core) in both cases are approximately equal and are close in shape to a sphere;

– the optimal value of the angle at the top of the conical nozzle is: for dense soils 90...95^0, for subsidence soils 100…110^0.

4.3. Study of the stress state of stamps using the SolidWorks software package

4.3.1. Proposed designs of stamps for the device of building foundations

Hollow metal stamps are intended for tamping recesses under foundations for buildings of various purposes. The bearing capacity of such a foundation is determined by the formation of a durable soil zone (core) under its base during the immersion of the stamp. The dimensions and density of this soil core determine the maximum load from the building, which can be transmitted through the foundation. Immersion of working elements, including stamps, can be carried out by both shock and static loads. At this stage, preference is given to machines that perform immersion by the removal method. At the same time, the force developed by this machine is within 100…120 tons and more. For stamping recesses under foundations, it is proposed to use metal hollow stamps of such designs (Fig. 9. *a, b, c*).

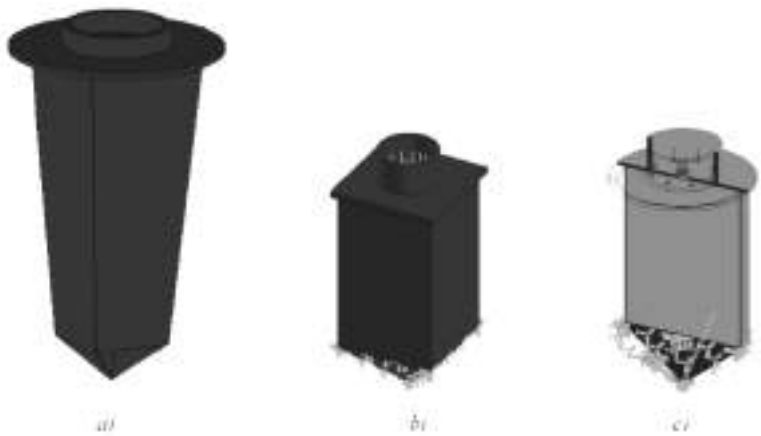

Fig. 9. Proposed designs of metal stamps for the arrangement of compacted soil base for foundations:
***a)* – conical stamp; *b)* – prismatic stamp; *c)* – cylindrical stamp**

Source: results of the authors' own research

The conical stamp (Fig. 9, *a*) is made of sheet steel, its height can be up to 2 m or more. The cross-sectional area depends on the design load that the foundation must withstand from the designed building. Prismatic and cylindrical stamps (Fig. 9, *b*, *c*) have a height of 1 to 1,5 m. All stamps can be used in the construction of foundations for buildings of low storeys (warehouses, industrial workshops, water towers, etc.). As noted above, the use of such foundations allows you to reduce the volume of excavation work, almost completely eliminate formwork, and reduce the consumption of concrete and metal.

Below are diagrams of the stress state of various stamps under the action of static loading. The diagrams were built using the SolidWorks software package (SolidWorks v NTUU KPI im. Sikorskoho). The initial data in this case were the following parameters: geometric dimensions of the stamp, the thickness of the stamp wall, the material (St. 3 and St. 5) and the static load equivalent to the weight – 60 tons.

It should be noted that the study of the stress state for all stamps was carried out at the moment of the greatest soil resistance on the side and front surfaces. Such a state can be observed when the stamp is completely immersed in the soil base. At this moment, the stress in the material reaches maximum values.

4.3.2. Study of the stress state of a conical die.

To understand how the stress in the material of a conical die changes, we will apply a static load in the central part of the intermediate metal plate (along the flange) and over the entire surface of the intermediate plate (Fig. 10 and Fig. 11, respectively). It is likely that the distribution of internal stresses in the metal structure of the die will depend on the location and plane of application of the load. Taking into account the number of load cycles from the conditions of the yield strength of the die material and fatigue failure, we will have the ultimate resource of the metal die.

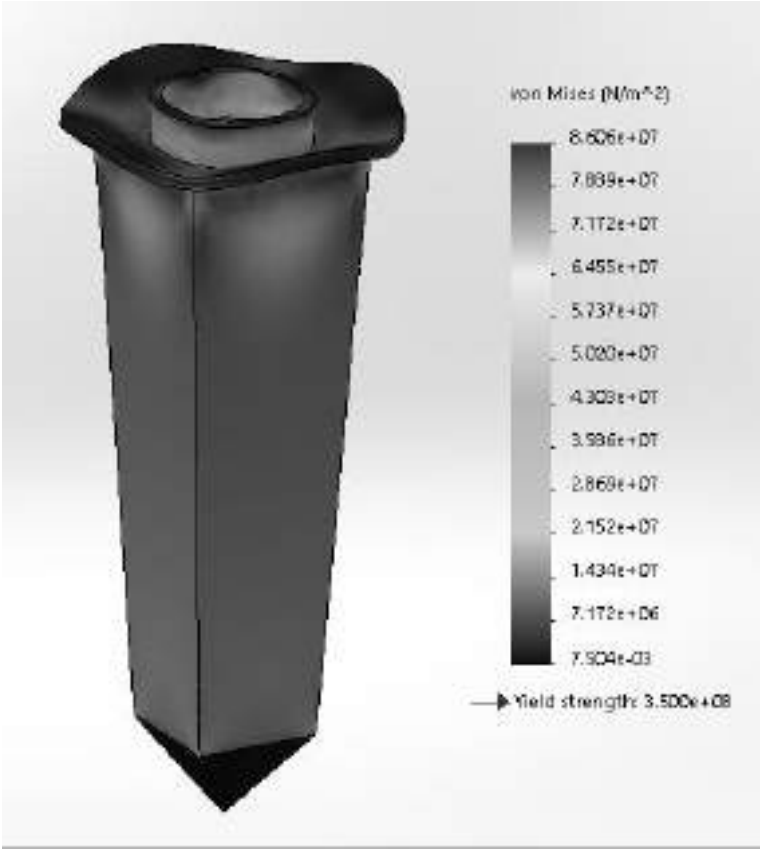

Fig. 10. Diagram of internal stresses in the die when a load is applied in the centre of the intermediate panel (this is typical for diesel hammering)

Source: results of the authors' own research

Fig. 10 shows a stress diagram that allows us to observe the change in internal normal stresses along the height of the die section under static external loads according to the Mises criterion (Pa). According to this criterion, the stresses in the upper part of the die, along the perimeter of the die, along the perimeter of the chabot, will be the greatest, but they are not critical for the adopted wall thickness and material of the structure (Fig. 11). The lowest internal stresses in the steel structure are observed in the lower part of the die, where the stiffeners form a sharp tip that facilitates the core's immersion in the soil base and contributes to stability and preservation of the vertical direction of immersion.

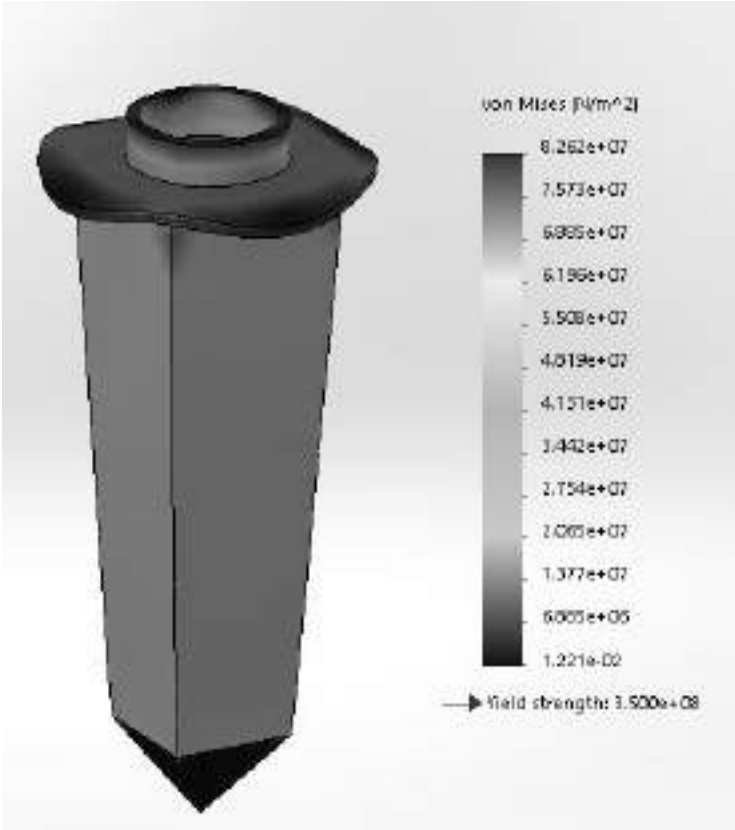

Fig. 11. Diagram of internal stresses of the stamp when applying an external static load over the entire plane of the intermediate panel

Source: results of the authors' own research

In this case, the stress in the upper part of the stamp structure will be maximum, and in the lower part, at the tip, will remain approximately at the same level as in the previous experiment. In the middle part of the metal structure, internal stresses will increase by 9-12% compared to the previous experiment.

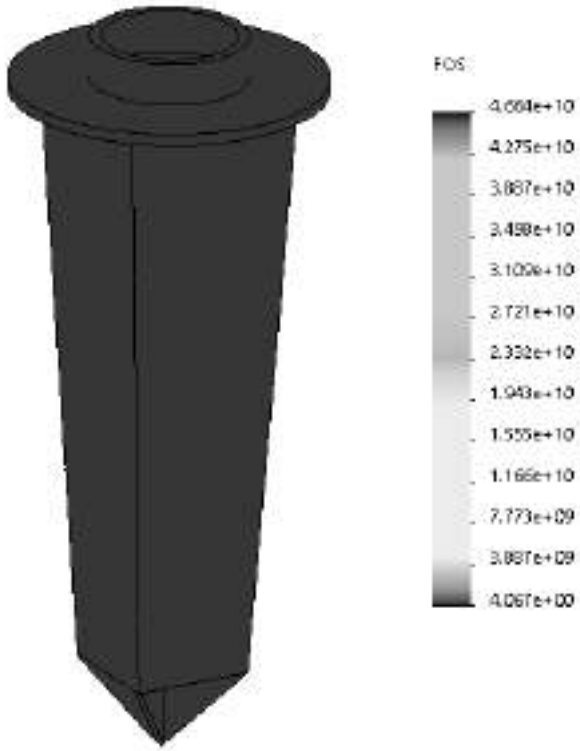

Fig. 12. The nature of the change in the safety margin of the die under static external load.

Source: results of the authors' own research

The safety margin is determined taking into account the yield strength of the material. Fig. 12 shows that the metal structure of the die withstands internal stresses from the action of static external load.

The concentration of internal stresses in the metal structure of the conical die (Fig. 13) allows us to study the structure according to the fatigue fracture criterion. The most vulnerable according to this criterion is the lower part of the metal structure of the die, as well as its upper part, starting from the welds that connect the die with the intermediate panel.

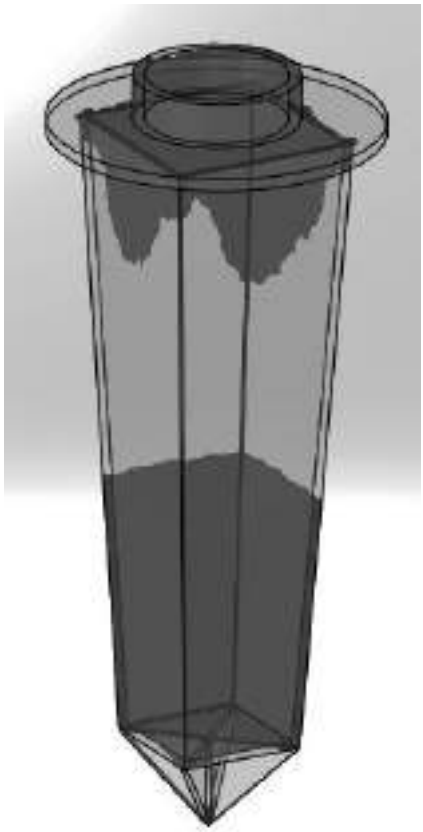

Fig. 13. Concentration of internal stresses in the metal structure of a conical stamp.

Source: results of the authors' own research

When the external load increases, the zone of concentration of internal stresses will spread downwards from the intermediate plate, and the lower zone of concentration of internal stresses will increase upwards, to the middle part of the stamp. Thus, the middle part of the metal structure of the stamp is the least loaded.

Fig. 14 shows a diagram of internal deformations, which characterizes the stability of the structure under loads, provides the possibility of obtaining the results of displacements and studying the structure for loss of stability. From the diagram of displacements it is clear that the most significant displacements during loading will occur in the upper part of the stamp structure.

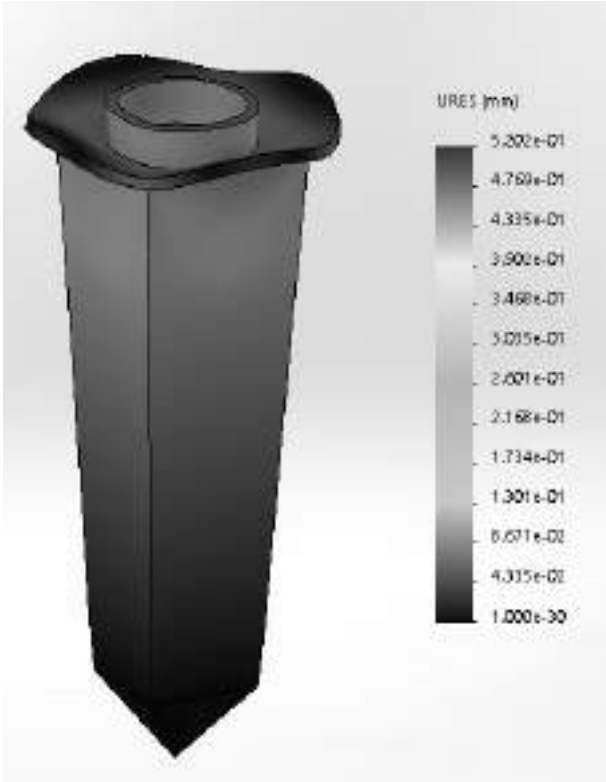

Fig. 14. Diagram of internal deformations of the metal structure of the stamp

Source: results of the authors' own research

4.3.3. Study of the stress state of a cylindrical stamp

A cylindrical stamp is a metal cylinder with a diameter of 900 mm. with a height of 1500 mm. A conductor for the hammer shank is placed in the upper part. Such a stamp can be immersed both by static loading with pressing machines and by impact method, a diesel hammer.

The safety margin of the stamp structure is determined by the yield strength of the material of the structure. The diagram (Fig. 15) shows the nature of the occurrence and distribution of internal stresses in the stamp structure when a static load is applied to the stamp.

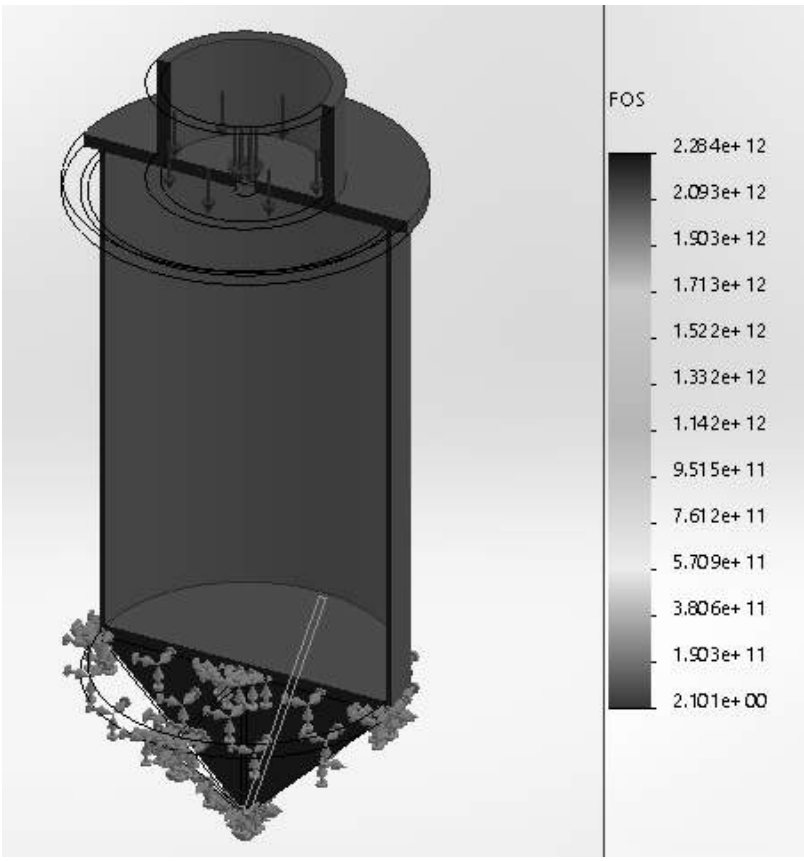

Fig. 15. Stress diagram in the die structure under the condition of applying a static load to the die

Source: results of the authors' own research

Fig. 16 shows a stress diagram that allows you to study the stresses in different parts of the structure under static and dynamic loads. According to this criterion, the stress in the upper part of the die along the perimeter of the chabot will be the greatest, but not critical. The lower part of the die has the smallest stress values.

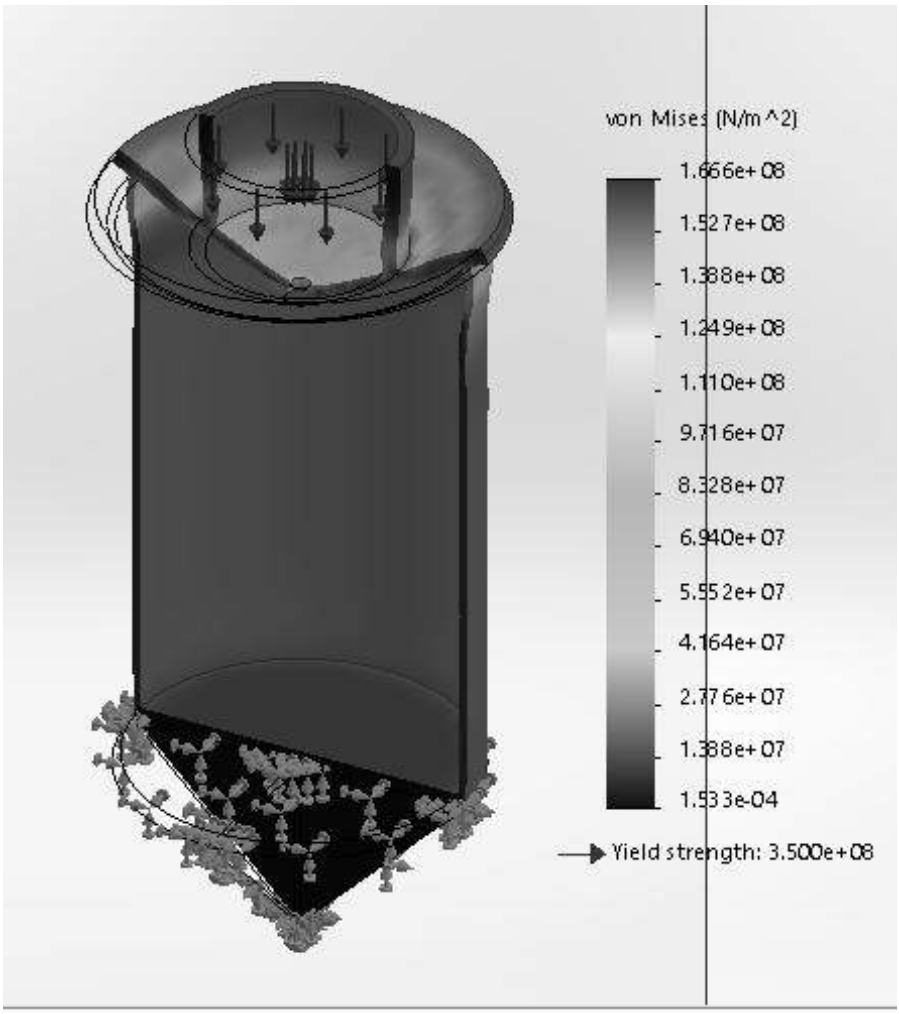

Fig. 16. Stress diagram of the die under load in the center of the flange of the transfer panel

Source: results of the authors' own research

Fig. 17 shows the stress concentration diagram of the cylindrical die structure. It allows the design to be tested for fatigue failure. The upper part of the die structure is most vulnerable to this type of failure, starting with the welds that connect the die to the upper transfer panel.

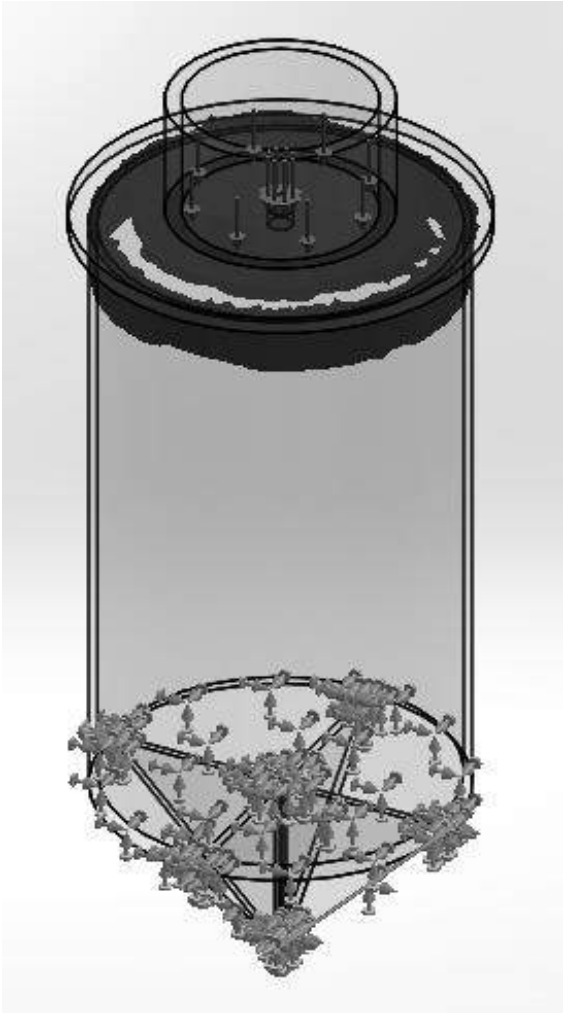

Fig. 17. Stress concentration diagram of a cylindrical die
Source: results of the authors' own research

As the load increases, the stress concentration zone will spread downward from the transfer plate (Fig. 18).

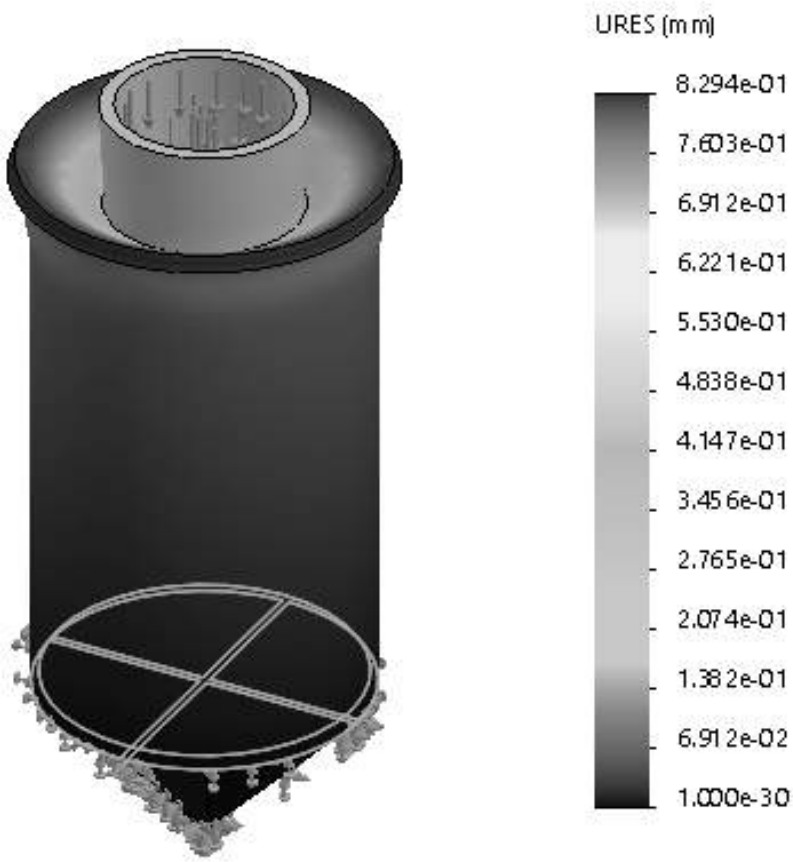

Fig. 18. Diagram of displacements of the die structure

Source: results of the authors' own research

Fig. 18 shows a diagram of displacements, which characterizes the stability of the structure under loads, provides the possibility of obtaining displacement results and studying the structure for loss of stability. From the diagram of displacements (Fig. 19) it is clear that the most significant internal deformations when applying external loads are realized in the upper part of the die-leader structure.

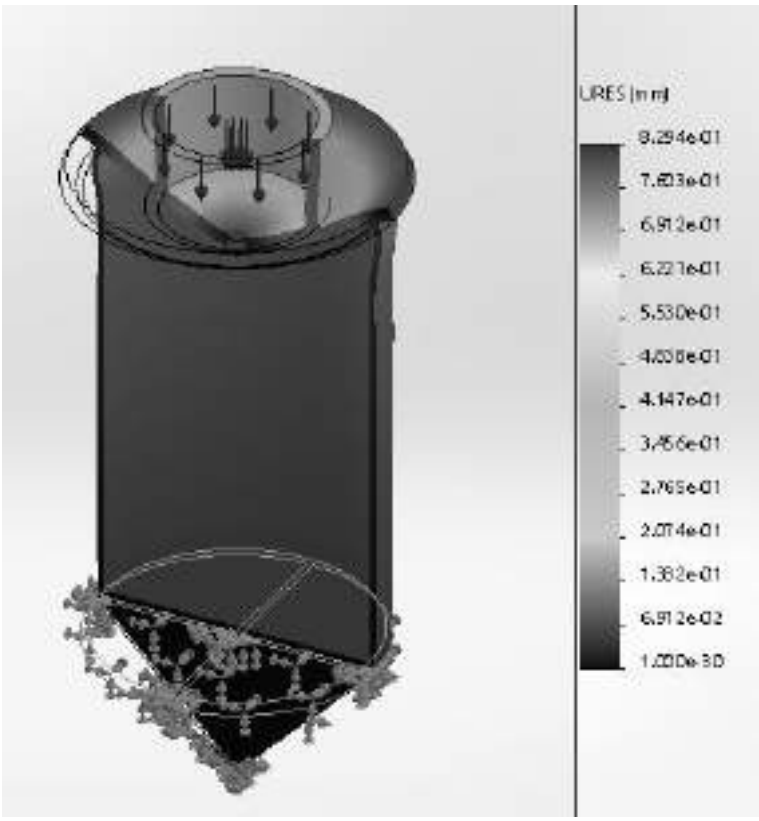

Fig. 19. Diagram of the displacements of the stamp structure in section

Source: results of the authors' own research

4.3.4. Study of the stress state of a prismatic stamp

A prismatic stamp is a metal prism with a square at its base with a side of 900 mm and a height of 1500 mm. A conductor for the hammer shank is placed in the upper part. When manufacturing it, it is advisable to use steel of the St.3 brand with a thickness of 20 mm. With the help of this stamp, a recess is rammed for the device of a reinforced concrete foundation of a given shape in it.

The safety margin is determined by the yield point of the material. From the diagram (Fig. 20) it is seen that under the condition of a static load of 589 kN (60 tons) acting on the stamp, the internal normal stresses in the metal structure of the stamp do not exceed the maximum permissible for St.3.

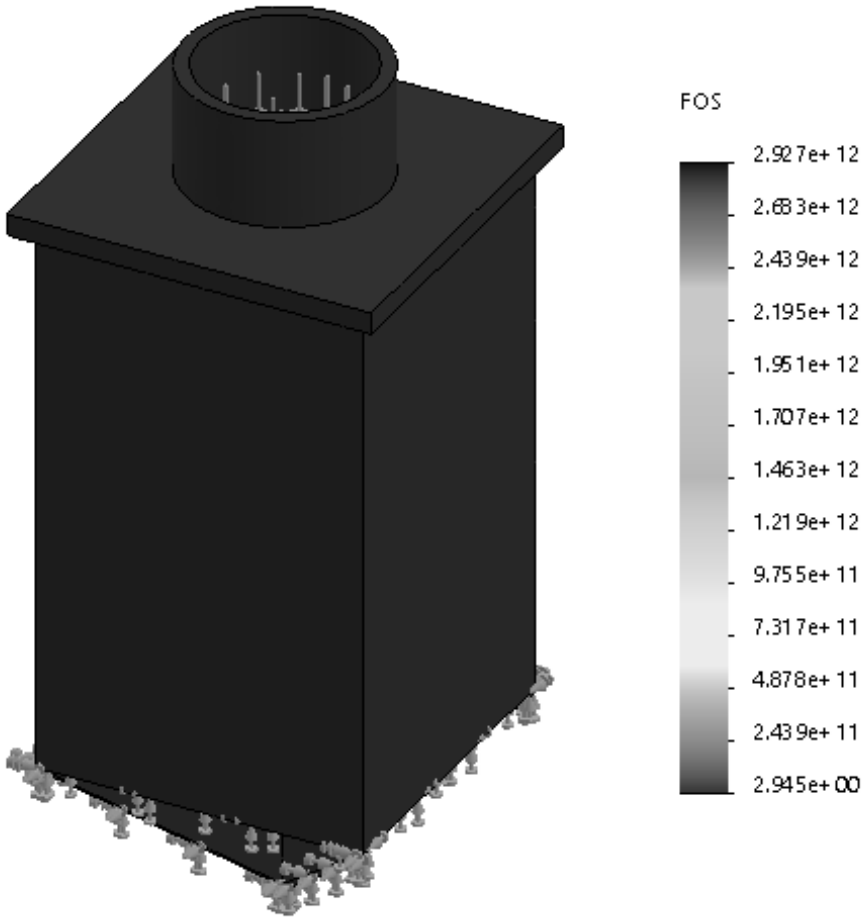

Fig. 20. The diagram of the safety margin of the die under static loading

Source: results of the authors' own research

Fig. 21 shows the diagram of the stress concentration of the die. It allows to examine the structure for fatigue failure, the most vulnerable according to this indicator will be the upper part of the die structure, starting from the welds that connect the die with the upper intermediate plate. With increasing external loads, the stress concentration zone will spread downwards from the intermediate panel.

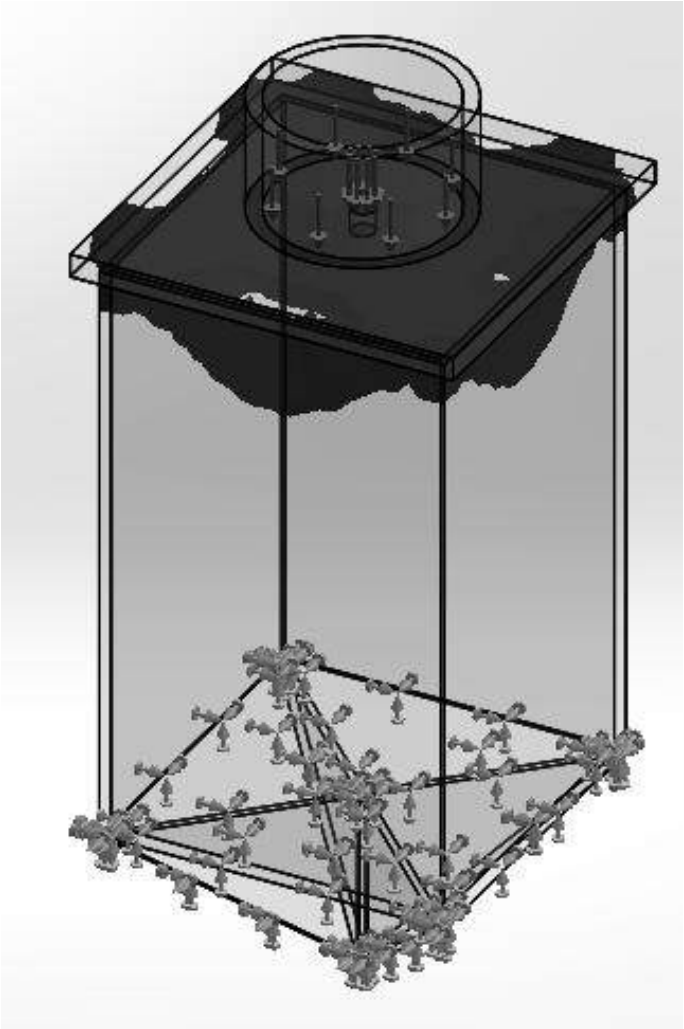

Fig. 21. Stress concentration diagram of a prismatic stamp

Source: results of the authors' own research

Fig. 22 shows a diagram of internal deformations, which characterizes the stability of the structure under external loads, provides the possibility of obtaining results on internal displacements and studying the metal structure for loss of stability. From the diagram of internal displacements (deformations) it is clear that the most significant displacements under external static loading will occur in the upper part of the stamp structure.

Fig. 22. Diagram of the displacements of the prismatic stamp structure

Source: results of the authors' own research

4.3.5. Conclusions

The study of the stressed state of the stamps using the SolidWorks software package showed that under static loading up to 589kN (60 tons), for immersing them in the soil base, the stamp material and their design withstand tests according to all the criteria of the SolidWorks program: fatigue failure, loss of stability, safety margin, not exceeding the permissible deformations that occur during loading.

When studying a cone-shaped stamp, under the condition of an external load distributed over the entire plane of the intermediate plate, the internal stresses in the upper part of the structure will be somewhat greater, and in the lower part, at the tip, will remain almost unchanged, as when applying external loads in the center of the intermediate plate. In the middle part of the metal structure of the stamp, the stresses will increase insignificantly. In this case, it is advisable to increase the thickness of the intermediate plate. The thickness of the metal intermediate plate should be within 40…50 mm.

When making dies, it is advisable to use steel (St.3) with a carbon content of 0,14 to 0,22% with a side wall thickness of 20 mm. It is not advisable to use high-quality or alloyed steels, which is explained by their significantly higher cost.

4.4. Study of the stress state of concrete blocks in the SolidWorks software complex

4.4.1. Concrete block designs for zero-cycle buildings

Hollow integrally formed concrete blocks (shells) are also intended for the construction of foundations for low-rise buildings. Their increased bearing capacity is due to the formation of a compacted soil core under the sole of the block during immersion in the permanent soil zone.

The results of modeling in the SolidWorks software complex are presented in the form of diagrams of the stress state of concrete blocks under the action of static external load. The initial data, in this case, were the following parameters: geometric dimensions of the shells, their thickness, material (M300 concrete) and static external load, equal to 589 kN (60 tons).

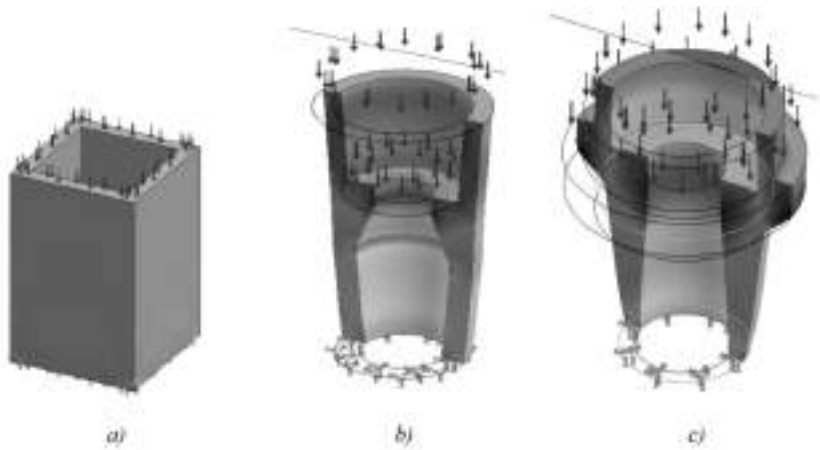

Fig. 23. Concrete blocks of different types for the construction of foundations under buildings: *a*) – a prismatic block with a height of 1 m under low-rise buildings; *b*) – a conical block with a height of 1,5 m under the columns of frame buildings; *c*) – a conical block with a widened upper part and a height of 1,5 m

Source: results of the authors' own research

4.4.2. Study of the stress state of prismatic blocks

Fig. 24 shows a diagram of the stress concentration of a prismatic block. It allows you to study the structure for the probability of failure according to the criterion – fatigue failure. The most vulnerable for prismatic concrete foundation blocks are the side surfaces of the shell. This is evidenced by the concentrated color of the paint in the lower side surfaces of the block. In the case of an increase in external loads, the development of the destruction process of the foundation block will be directed uphill from the base of the shell.

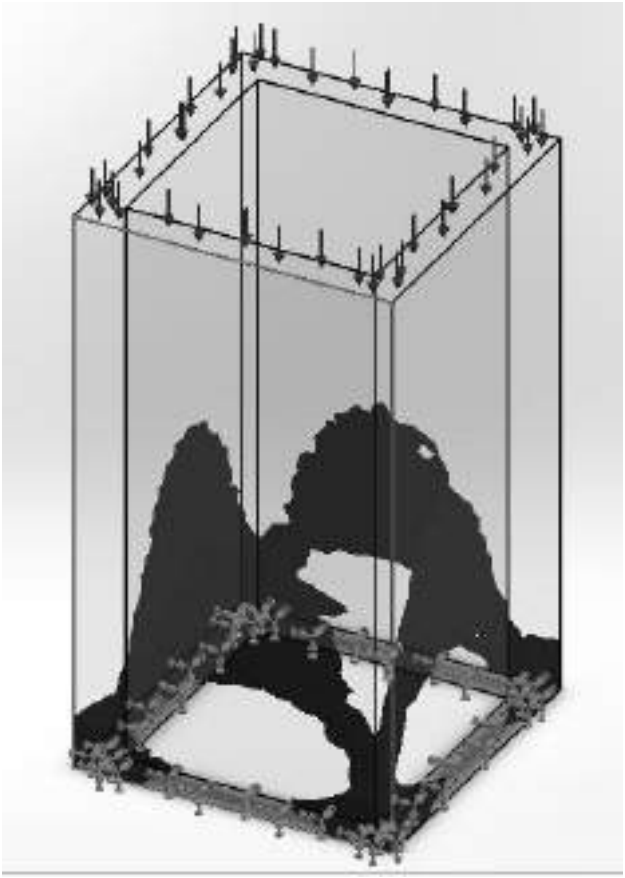

Fig. 24. Concentration of internal stresses in the body of a concrete prismatic foundation block

Source: results of the authors' own research

Fig. 25 shows a diagram of internal deformations, which characterizes the stability of the block under external static loads. The change in the values of internal deformations along the length of the concrete prismatic foundation block is shown. The most significant internal deformations of the block material under static loading occur in the upper part of the foundation shell. Loss of concrete integrity with further increase in load may occur in the upper part of the shell. In this case, internal deformations in the concrete structure are not significant, and are maximum 0,009 mm on the surface of contact of the shell with the intermediate plate (damper).

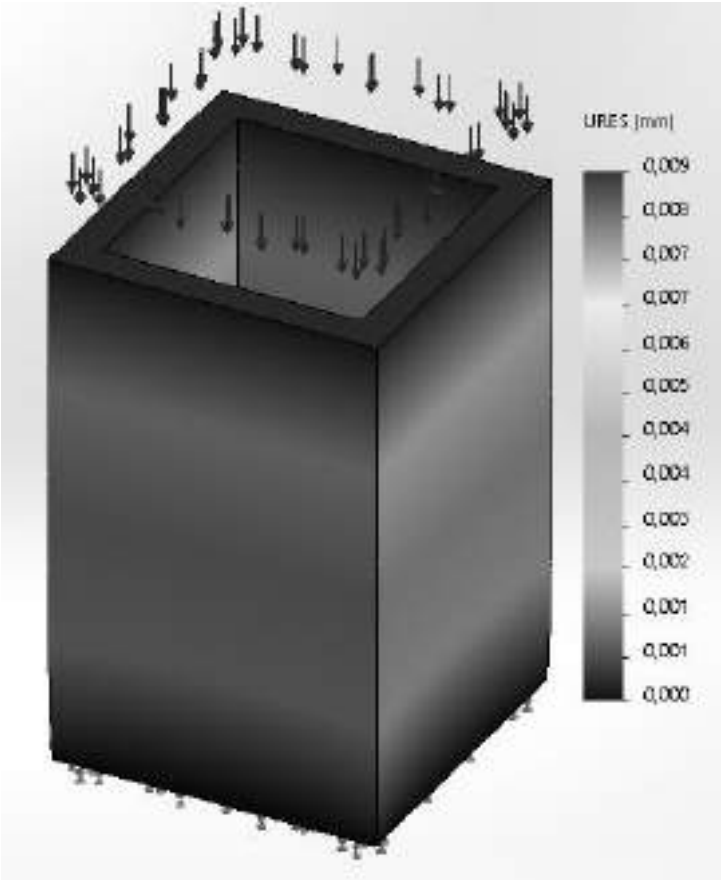

Fig. 25. Diagram of internal deformations of a prismatic concrete block

Source: results of the authors' own research

The safety margin is determined by the yield strength of the material. Based on the graph (Fig. 26), it can be stated that the most vulnerable to possible destruction of the shell are the contact points of the side faces and the

soil base in the lower part of the shell (red color of the graph). The upper part of the block will be the least vulnerable (green color).

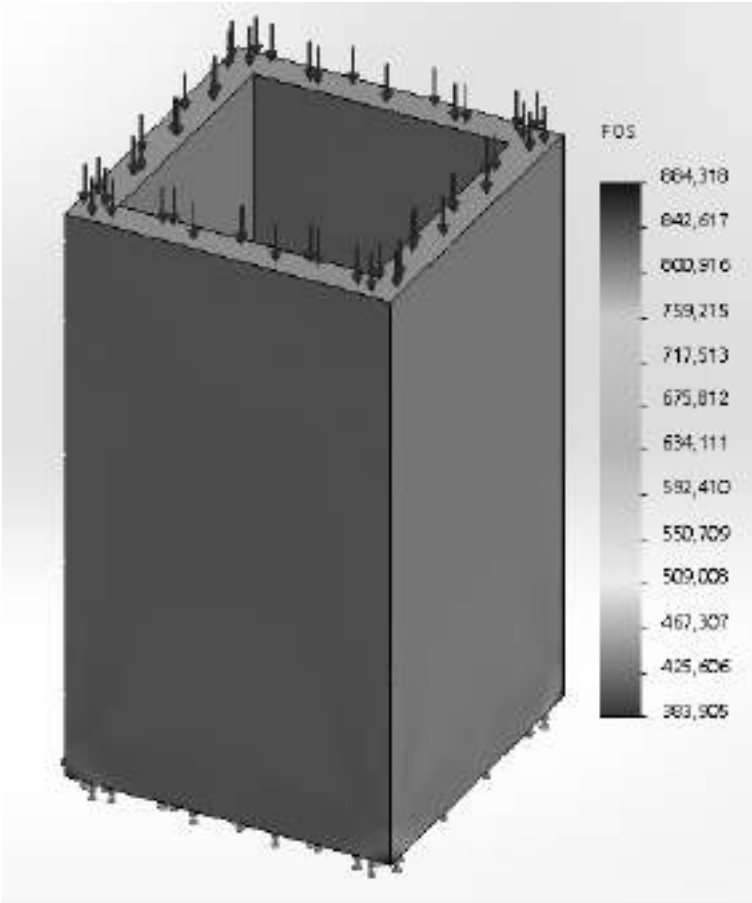

Fig. 26. Safety margin diagram of a prismatic block

Source: results of the authors' own research

The stress diagram allows you to construct the effective stress (Fig. 27) in different places of the structure under static and dynamic loads according to the Mises criterion, when the elastic deformation of the material turns into plastic, but at this point the strength is not yet lost.

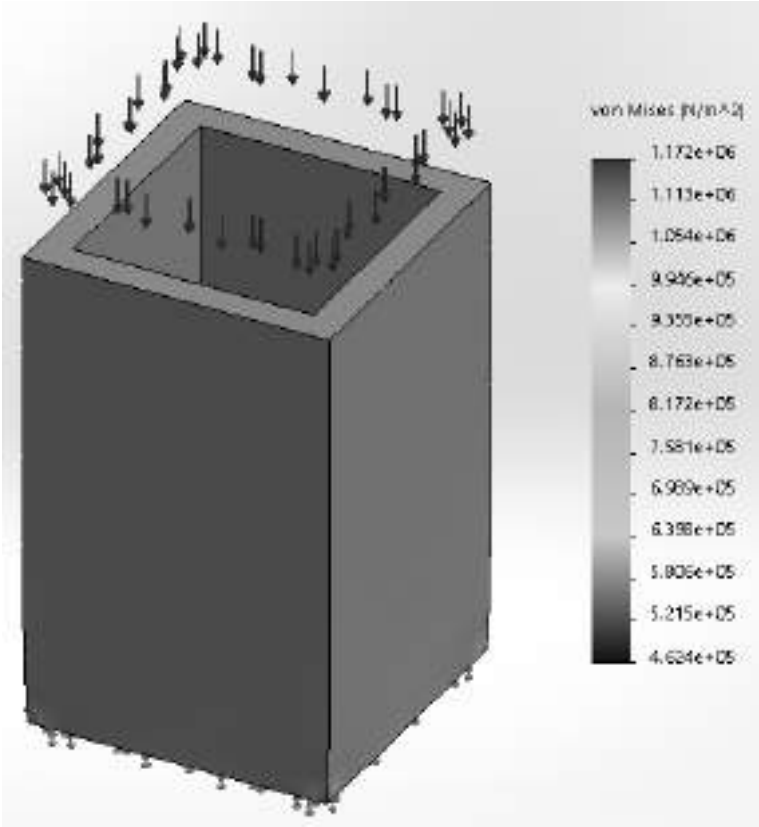

Fig. 27. Diagram of internal normal stresses in the material of a prismatic concrete block

Source: results of the authors' own research

4.4.3. Study of the stress state of hollow conical blocks

Conical reinforced concrete blocks are used in the construction of frame buildings. The bearing capacity of such a shell is determined by the formation of a compacted zone under the base of the shell, as well as the resistance of the soil on the side surface.

The stress diagram obtained as a result of modeling in the SolidWorks environment allows you to build the resulting stress in different parts of the structure under static and dynamic loads according to the Mises criterion. From the diagram (Fig. 28) it is clear that the greatest stress according to this criterion occurs in the middle part of the conical block at the end of the internal structural element (red belt). Closer to the upper cut of the shell,

the stress decreases, towards the lower supported ring it will also be smaller (yellow – green zone).

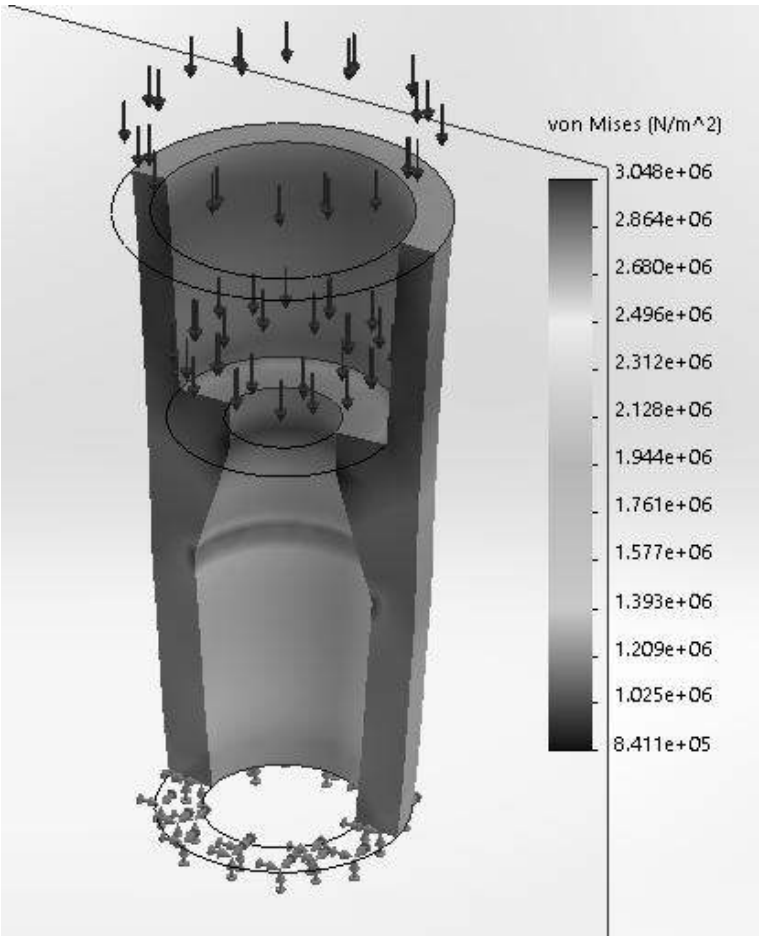

Fig. 28. Diagram of internal stresses in the material of a conical block

Source: results of the authors' own research

The safety margin is determined by the yield strength of the material. From Fig. 29 it is clear that the lower part of the conical block is the most vulnerable.

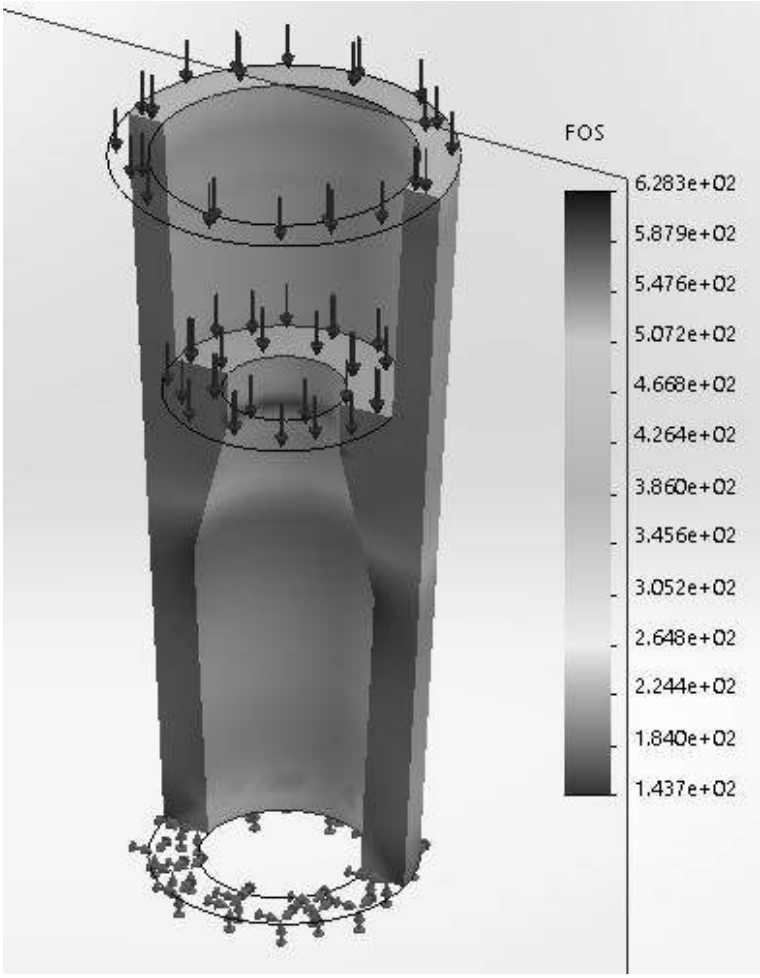

Fig. 29. Safety margin diagram of a conical block

Source: results of the authors' own research

Fig. 30 shows a spectral displacement graph that characterizes the stability of the block under loads and provides the possibility of obtaining displacement results and studying the structure for loss of stability. The displacement graph shows that the largest deformation values will occur in the upper part of the conical shell.

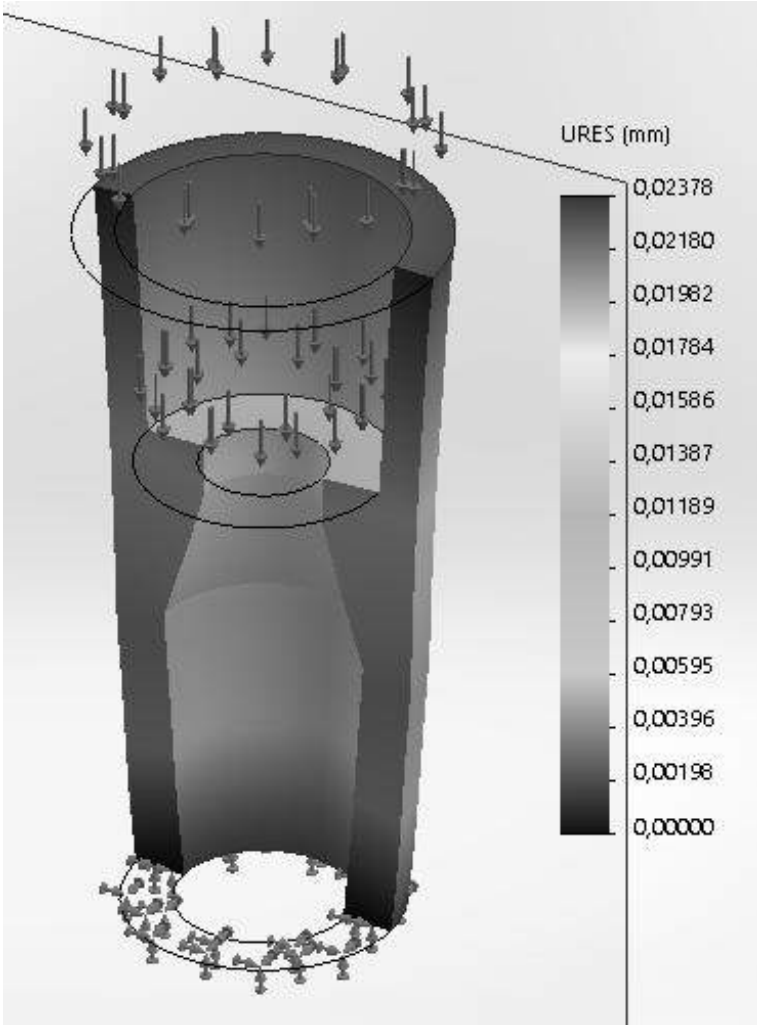

Fig. 30. Spectral graph of internal displacements (deformations) of a conical block

Source: results of the authors' own research

Fig. 31 shows the nature of the location of the stress concentration of the foundation conical block. This allows analyzing the structure for fatigue failure. The most vulnerable in terms of this parameter is the lower part of the shell. With increasing load, the failure will begin in the lower part of the shell and will spread upwards from the lower base of the block.

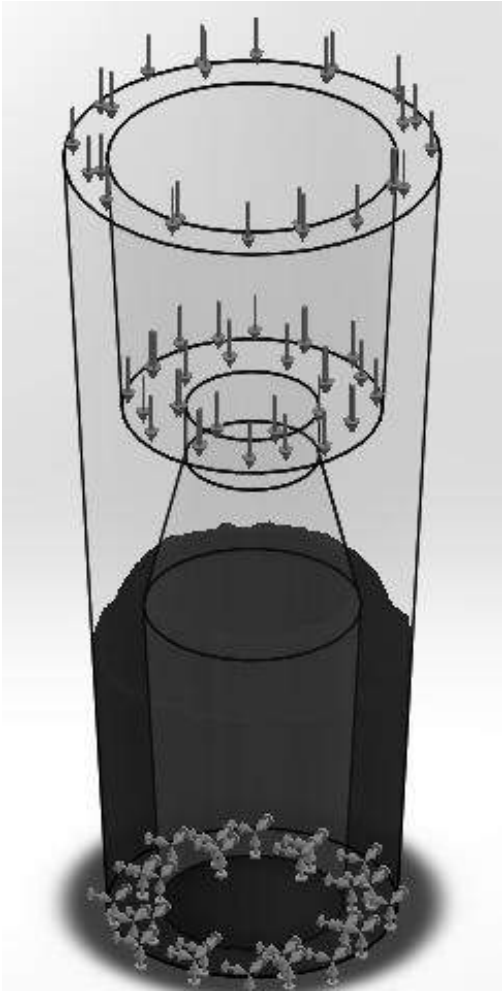

Fig. 31. The nature and location of stress concentration points in the body of a conical block

Source: results of the authors' own research

4.4.4. Study of the stress state of concrete conical blocks with an expanded upper part

Such a shell has, compared with the previous ones, a higher bearing capacity. In addition to the formation of a compacted zone under its base and support on the side surface, it rests on the soil with its upper wider part (the so-called flange), which increases its bearing capacity by approximately 10...15%.

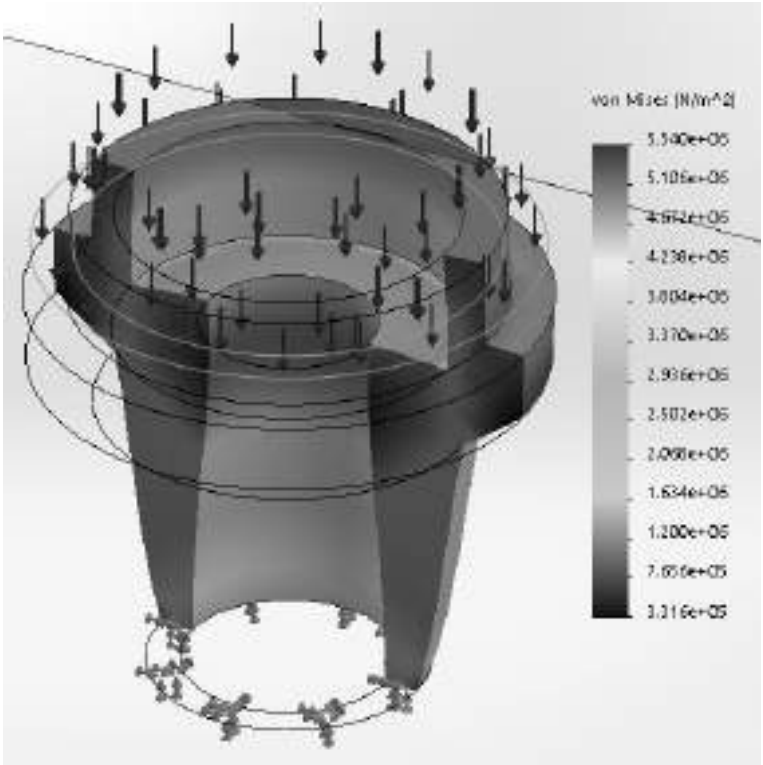

Fig. 32. The nature of the distribution of internal stresses in the body of a conical block

Source: results of the authors' own research

Based on the obtained graphs, it is possible to construct the effective stress in different places of the structure under static and dynamic loads according to the Mises criterion. From Fig. 33 it is seen that the greatest internal

stress according to this criterion occurs in the lower base of the conical shell (red belt). Closer to the upper cut of the shell, the stress decreases (green zone).

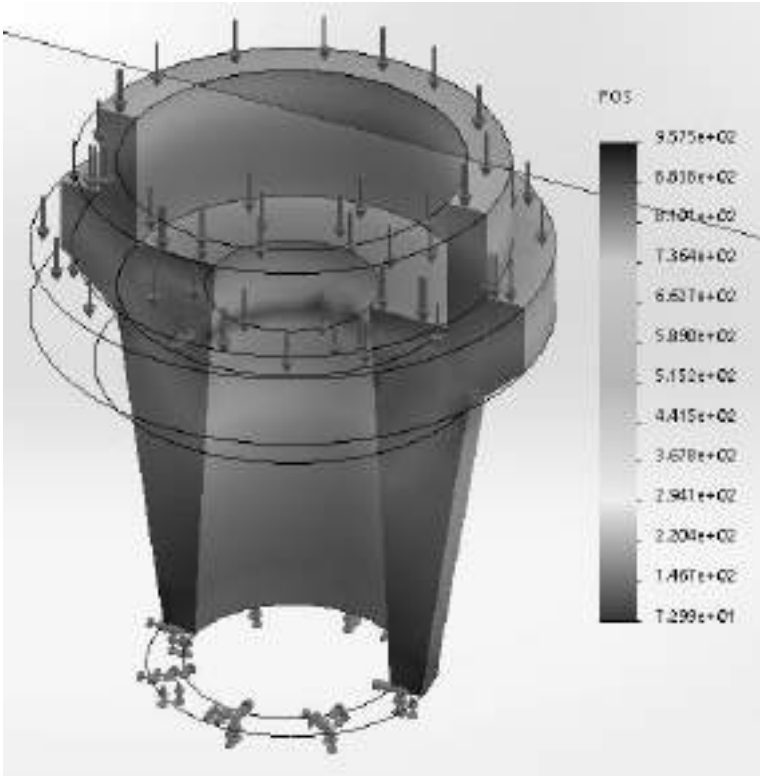

Fig. 33. Conical block safety margin diagram

Source: results of the authors' own research

The middle part of the shell is vulnerable. The shell has the largest safety margin in the red zone.

Fig. 34 shows the nature of the location and concentration of internal stresses in the shell. This makes it possible to analyze the shell design according to the criterion of fatigue failure. In this case, the lower part of the shell and the zone at the point of contact of the surfaces (blue ring) are most vulnerable. With an increase in the external load, possible failure will spread upwards from the lower base of the shell.

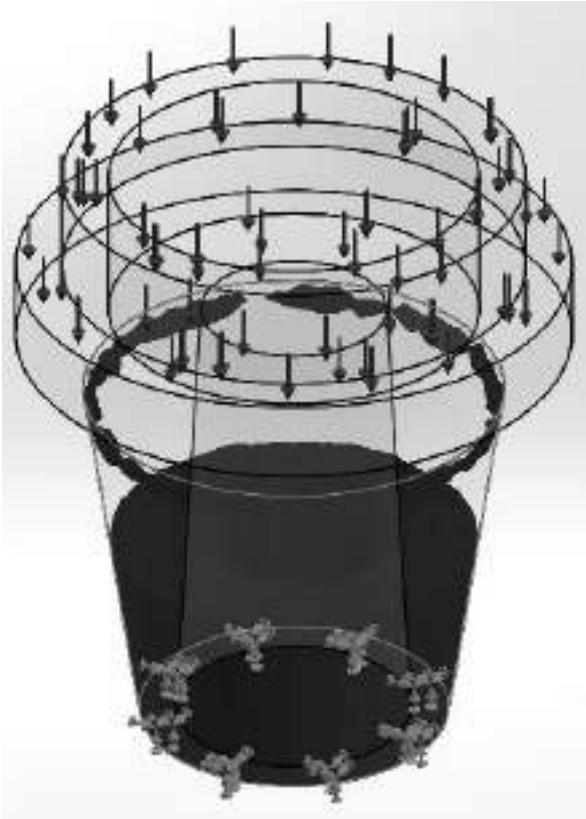

Fig. 34. The nature of the location and concentration of internal stresses in the body of a conical block

Source: results of the authors' own research

Fig. 35 shows a spectral-color interpretation of internal deformations, which characterizes the stability of the shell under external loads. This will allow analyzing the obtained deformation results and making decisions about the loss of structural stability. From the change in deformations it is clear that the most significant deformations, at given values of loads, occur in the upper part of the shell. In the lower part of the shell structure, they are minimal.

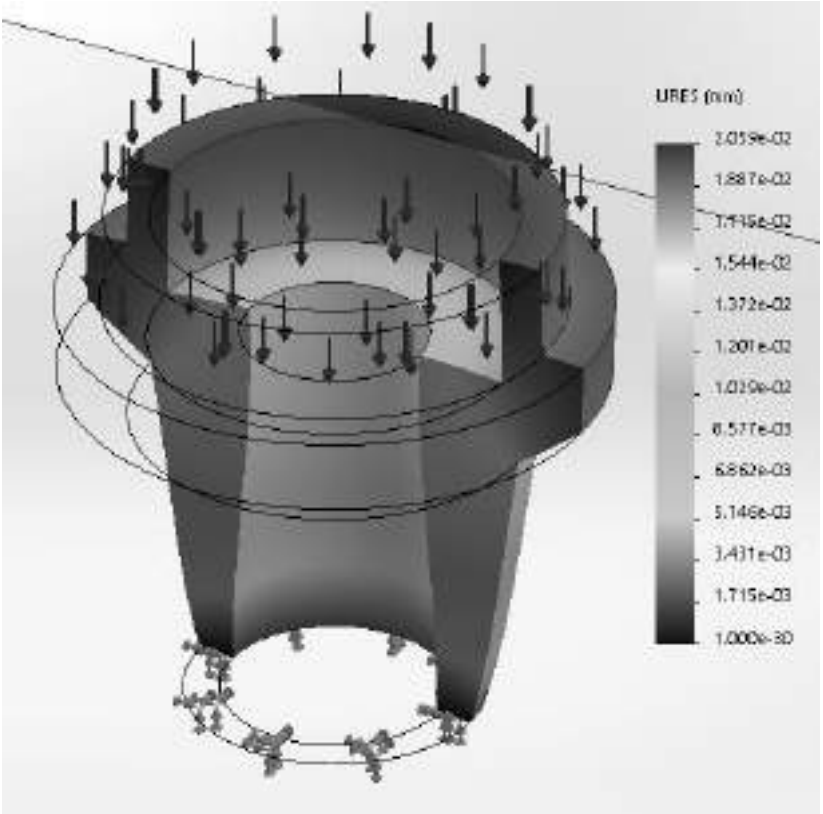

Fig. 35. Internal deformations of a conical block

Source: results of the authors' own research

4.4.5. Conclusions

Study of the stress state of concrete blocks of various types using the SolidWorks software package showed that under a static load within 589 kN (60 t) for their immersion in the soil, the shell material and their design withstand the load according to all the criteria of the SolidWorks program: fatigue failure, loss of stability, safety margin and deformations occurring during loading.

It should be noted that the study of the stress state of concrete blocks was carried out at the moment of their complete immersion in the soil, when the soil resistance on the side and front surfaces reached its maximum value.

As shown by the research in the SolidWorks software package, it is advisable to use M300 concrete with a wall thickness within 100 mm for the manufacture of concrete blocks. It is not practical to use higher grades of concrete from an economic point of view.

4.5. Methods of immersing stamps and concrete blocks into the soil and zero-cycle construction technology

4.5.1. Recommended methods of immersing metal stamps and concrete blocks

Immersion of stamps and concrete blocks can be carried out by both impact and static loading. At this stage, preference is given to machines that perform immersion by the removal method. At the same time, the static load that specialized machines can implement is within 120 tons.

In Ukraine, replaceable jacking equipment based on the МКГ–25.01А crane, which was produced by ТОВ «Дніпрокран», Dnipro, is quite common. Cranes of this series, unlike the previous one, have 19 types of replaceable working equipment. For immersion of stamps and blocks, it is advisable to use a diesel hammer C – 996 with a mass of the impact part of 1,8 tons.

The jacking rig consists of the following main parts (Fig. 36): base machine 1 – МКГ -25.01А crane with a boom length of 14,4 m, sinker 2 – diesel hammer C-996, equipped with a mechanism for dumping the impact part, with a special head – 3, loading – 4 and discharge – 5 blocks, drilling rig with drive – 6, jacking mast with guides – 7, loading cable for the hammer – 8, loading cable for lifting the dies – 9, traverse – 10, die – 11.

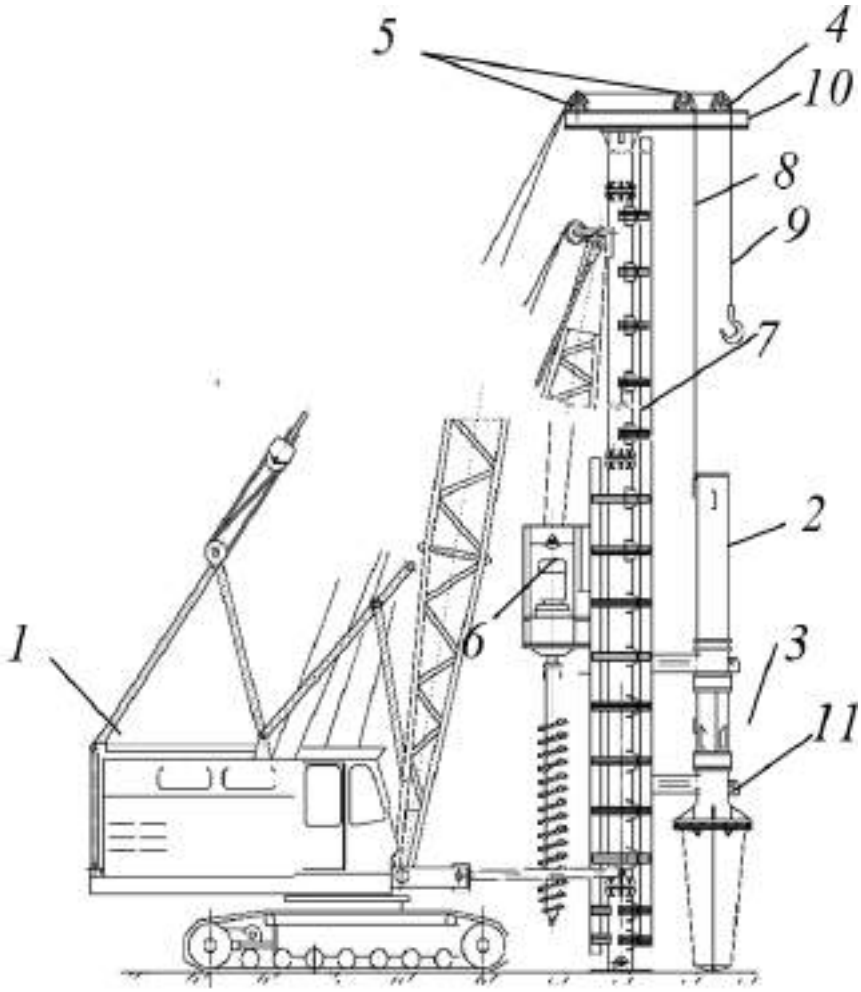

Fig. 36. General view of the pile driver based on the MKG-25.01A crane

Source: results of the authors' own research

The hammer is mounted on the pile driver mast guides. Replaceable working elements (rammer or leader) are attached to the diesel hammer through the headstock.

4.5.2. Proposed technology of pile driver equipment based on a crawler crane

In our opinion, a more appropriate technology for the construction of foundations for low-rise buildings would be technology (Panteleienko, V.I., Karpyshyn, S.O. 2022), which involves stamping recesses using hollow metal dies, rather than the technology that involves sinking concrete blocks. Because concrete blocks must be manufactured using special molds and then transported to the construction site, and these types of work require additional costs for transportation and manufacturing of special equipment and the blocks themselves.

As a result of the research, the following technological sequence of work on the arrangement of foundations for buildings for various purposes is proposed (Fig. 37):

1. Drilling a leader well if necessary (if the soil has a high density of 1,8…1,9 g/cm^3, determined by the field laboratory), full installation of the working body at the immersion point is carried out by manipulating the crane's rotary platform and boom;
2. Installing a stamp in the well (the diameter of the well must be smaller than the cross-section of the stamp);
3. Stamping the recess to the design mark;
4. Tamping hard material into the bottom of the recess – crushed stone, slag, etc., if the bearing capacity of the soil base is insufficient (this is determined by constructing a trial foundation and studying it by static loading);
5. Installing the reinforcing frame in the profile recess and filling it with concrete (concrete compaction if necessary). For the vast majority of soils, there is no need in points 1 and 4.

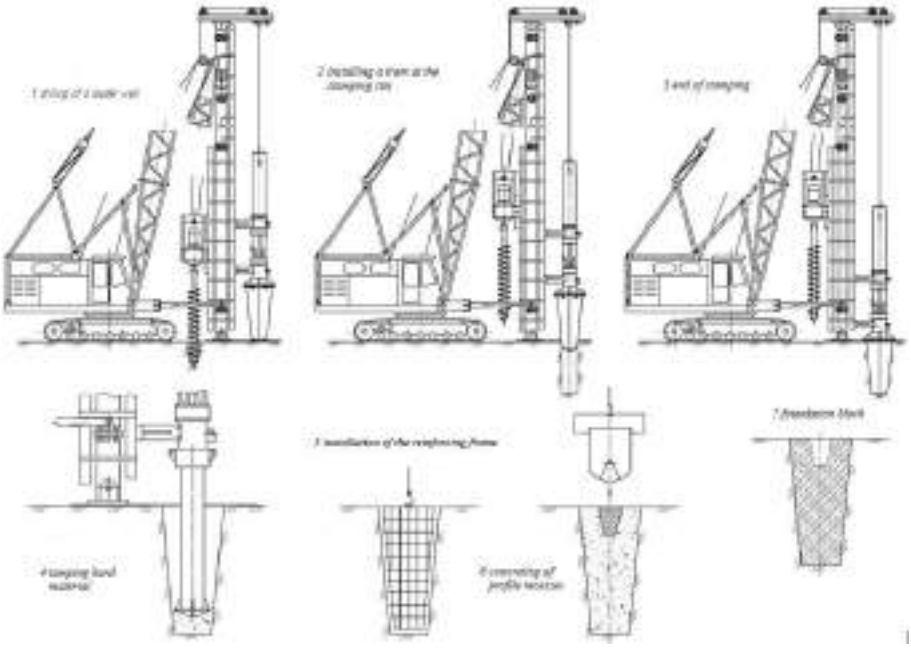

Fig. 37. The proposed technology of the cofferdam installation when constructing foundations by stamping depressions in the soil

Source: results of the authors' own research

4.6. Conclusions

1. Laboratory studies using color layers and photograms confirm the assumption that during the immersion of the stamps and concrete blocks around them and in the base, a compacted zone with increased strength characteristics is formed.
2. From the photograms it is obvious that it is not advisable to use conical cylindrical foundation blocks with an open and closed base for the construction of a zero cycle because after their immersion, cavities remain on the sides that need to be filled with soil. More practical from this point of view will be blocks that have a conical shape and a closed base.
3. The study of the stress state of the proposed stamps using the SolidWorks software package showed that under a static load of 589 kN (60 tons) when immersed in the soil, the stamp material and its design withstand the test according to all the criteria of the SolidWorks program: fatigue failure, loss of stability, safety margin and deformations.

4. When manufacturing stamps, it is advisable to use steel (St.3) with a carbon content of 0,14 to 0,22% with a side wall thickness of 20 mm. It is not advisable to use higher-quality or alloyed steels for economic reasons.
5. The study of the stress state of concrete blocks of various types using the SolidWorks software package showed that their design withstands tests for fatigue failure, loss of stability, safety margin and deformations occurring under load.
6. For the manufacture of concrete blocks, it is advisable to use concrete of the M300 brand with a wall thickness within 100 mm. It is impractical to use higher grades of concrete from an economic point of view.
7. A technology for the construction of foundations for buildings has been developed, practically tested and proposed, which involves stamping recesses using developed hollow metal dies.

Bibliography

1. Kryvosheiev, P., Farenyuk, G., Tytarenko, V., Boyko, I., Kornienko, M., Zotsenko, M., Vynnykov, Yu., Siedin, V., Shokarev, V. (2017) Innovative projects in difficult soil conditions using artificial foundation and base, arranged without soil excavation. *Proc. of the 19th Intern. Conf. on Soil Mechanics and Geotechnical Engineering*. Seoul, 2017. P. 3007–3010.
2. Panteleienko V.I., Karpyshyn S.O. (2022) Machines and equipment for the arrangement of recess for foundations of quickly installed technological mining facilities without digging: monograph. Petrosani, Romania: UNIVERSITAS Publishing, 2022. 63 p. DOI: https://doi.org/10.31713/m1121.
3. Пантелеєнко В.І., Карпушин С.О., Червоноштан А.Л., Ігнатов А.Б. (2020) Дослідження напруженого стану металевих штампів під фундаменти для будівель різного призначення. *Науковий вісник будівництва.* Харків: ХНУБА, 2020. Т. 101, № 3. С. 99–107. DOI: https://doi.org/10.29295/2311-7257-2018-101-3-99-107.
4. Panteleienko V. I., Karpushyn S. O., Chervonoshtan A. L. (2023) Interaction of conical monolithic thin-walled reinforced concrete shells with the soil of the foundation. *IOP Conference Series: Earth and Environmental Science.* 2023. Vol. 1254. – DOI: https://doi.org/10.1088/1755-1315/1254/1/012058.

5. Пантелеєнко В. І., Голубченко О. І., Карпушин С. О., Червоноштан А. Л. (2024) Дослідження процесу занурення у ґрунт конічних бетонних блоків при спорудженні будівель. *Науковий вісник будівництва.* 2024. Вип. 111. С. 97–104. DOI: https://doi.org/10.33042/2311-7257.2024.111.1.13.

6. Vynnykov Yu. L. Modeling of processes of hardening of soil under symmetrical stress-strain conditions: Author's abstract. dis. ... Dr. Tech. Sciences: 05.23.02. Kyiv: KNUBA, 2005. 22 p.

7. Борщ В. С., Пантелеєнко В. І., Карпушин С. О. (2019) Стенд для дослідження процесу витрамбування поглиблень. *Тези доповідей І Всеукраїнської студентської науково-практичної конференції "Досвід впровадження у навчальний процес сучасних комп'ютерних технологій"*. Кропивницький: ЦНТУ, 2019. С. 35.

8. Пантелеєнко В.І., Карпушин С.О. (2010) Дослідження процесу занурення тонкостінних фундаментів-оболонок при зведенні нульового циклу будівель і споруд. *Наукові записки.* Кіровоград: КНТУ, 2010. Вип. 10, ч. ІІІ. С. 228–235. URL: https://dspace.kntu.kr.ua/server/api/core/bitstreams/8103febd-980b-4f86-8077-695c7677977d/content.

9. Пантелеєнко В. І. Розробка і визначення основних параметрів обладнання для занурення фундаментів-оболонок: дис. ... канд. техн. наук: 05.05.04. Дніпропетровськ, 2004. 242 с.

10. SolidWorks в НТУУ КПІ ім. Сікорського. URL: https://www.youtube.com/@Solidworks_NTUU_KPI.

dr inż. Dariusz Tomaszewicz
https://orcid.org/0000-0002-1359-902X
e-mail: dt542@lomza.mans.edu.pl
International Academy of Applied Sciences in Lomza

5. PROSPECTS FOR THE DEVELOPMENT OF LARGE-PANEL SLAB BUILDINGS IN EUROPE AND POLAND IN DEPENDING OF CURRENT NEEDS

Abstract

The history of large-panel slab building in Europe dates back more than 100 years; in Poland, large-panel buildings have been in use for almost 60 years. With the passage of time, repair work and the modernization of the stock of large-panel slab buildings was necessary. The large number of large-panel blocks in the former Czechoslovakia is due to the fact that the authorities of the time started to introduce this technology early. Hungary can also boast a large number of large-panel slab buildings. This is more than 800,000 dwellings. Whether in the Czech Republic, Slovakia or the Baltic states, the stock of large-panel slab buildings will be modernized due to the high costs of new construction. The adaptation of large-panel slab buildings to current requirements requires a number of works related to the improvement of parameters that determine, among other things, the durability of the joints between the façade layer panels and the structural layer. This problem is being tackled variously across Europe. Germany has partly regarded large-panel slab buildings as a relic of the past and has decided to demolish some of these buildings.

At present, in order to bring large-panel buildings into compliance with the current Technical Conditions 2024, the U-value of the building envelope must be successively reduced. Work is being carried out by installing additional thermal insulation on top of the thermal insulation. An alternative to large-panel slab buildings could be the use of thermal insulation on the inside. The adaptation of large-panel buildings to current requirements also involves a number of works related to the comfort of the inhabitants of these

blocks of flats. Here, external lifts should be designed and added to facilitate the movement of people with various disabilities or women with small children.

Keywords: thermomodernization, thermal insulation, large-panel slab buildings, textured and structural layer, bonded anchors, Energy Performance of Buildings Directive, Energy Efficiency Directive, Renewable Energy Directive.

5.1. Introduction

The large-panel slab buildings was first used in the Netherlands during the construction of the Betondorp estate in the suburbs of Amsterdam between 1923 and 1925, and somewhat later in the two-storey buildings on the Splanemann estate in Berlin-Lichtenberg in 1923. Studies on whole-wall elements were carried out in the 1920s by Walter Gropius. The ideas promoted by the French architect Le Corbusier of the "house as a dwelling machine" – a housing unit, or flat block (French: Unité d'habitation, realised in Marseille in 1952) with loggias as hanging gardens in all the living rooms and a public garden on the flat roof, guided by proportions determined by the standing human figure (183 cm) and the same figure with arm raised (226 cm) – also had a significant influence on the development of the large slab. All the dimensions of the flat and house called the "Modulor" system were the resultant of these values, however, they were considered controversial and were corrected already in the third flat block by this architect, in Berlin, where these dimensions were increased (Borawski, 1923).

The first major concrete large slab structures were built at the end of the 1930s in France (in 1934 a prefabricated concrete block housing estate was built in Drancy), Sweden and Finland, and they also became quite common in Germany. As early as the mid-1970s, large-panel technology was finally abandoned in Western Europe, mainly due to the increasing costs of heavy transport.

The Second World War caused great damage to residential buildings, mainly in the cities. After its end, rapid and significant demographic growth created the need for housing programmes for middle-income people. In some European countries, the building season was limited by weather conditions. Heavy industry, which had worked for the armaments industry during the war, saw the development of the production of mechanized construction equipment

including cranes, allowing construction work to be mechanized quickly (Wierzbicki, Sieczkowski, 2014).

The large number of large-panel blocks in the former Czechoslovakia is due to the fact that the authorities of the time started to introduce this technology early. In 1970, as much as 76% of the total housing volume in Czechoslovakia was built using large-panel slab. The corresponding figure for Poland was barely 19%. The Czech stock of large-panel dwellings known as 'paneláky' numbers 1.2 million units. In Prague and other municipal capitals, large-panel flats have an average price per m2 that is 38% lower than that of new flats. In both the Czech Republic and Slovakia, the more costly modernisation of large-panel slab buildings and their gradual wear and tear is increasingly being addressed. Hungary is another Visegrad country characterised by a large number of prefabricated blocks of flats built before 1989. It can be estimated that there are more than 800 000 Hungarian flats in large-panel slab buildings ("Panelház"). Such dwellings accounted for approximately 19% of the total housing stock in 2011 and were home to 18% of Hungarians. Presumably, these results have not changed strongly, as few new flats and houses have been built in Hungary over the past decade. Hungary (like the Czech Republic and Slovakia) has supported the modernisation of large-panel slab blocks over the years, but this does not mean that the implementation of the EPBD will be straightforward there. Large-panel slab blocks are also not difficult to spot in the Baltic States. As in the other union republics of the USSR, the basis for large-panel slab construction there was Soviet technology.

The housing legacy of the USSR is causing problems in Latvia, among others. Yes, around 70 per cent of Latvia's housing stock was built during the Soviet era. However, Soviet housing solutions stood out negatively in terms of quality compared to the rest of the Eastern Bloc. Examples include the extremely small flat sizes and the "Khrushchev" blocks, which were characterised by very poor insulation and limited design life. However, it can be assumed that in Latvia, as in the rest of the Baltic States, post-socialist construction will be modernised due to the high cost of building new stock. Large prefabricated buildings can also be found in the western part of Germany. Nevertheless, such blocks are a hallmark of the former GDR. After the reunification of Germany, Enerd's large slabs (Plattenbau) were treated more freely than in Poland, for example. This is not only due to the higher incidence of demolition of large slab blocks compared to other former Eastern Bloc countries. It is not only the fact that the demolition of blocks of flats was more frequent than in other Eastern Bloc countries. It is also worth noting the concepts

of combining smaller flats by demolishing walls and such avant-garde ideas as subdividing blocks of flats into smaller ones or creating superstructures. Among other things, the shrinking population in the former GDR is encouraging these experiments.

5.2. The genesis of the problems of large-panel slab buildings in Europe

In the case of the German experience (Fouad, Cziesielski, 1999), similar questions arise as in Poland. Are the hangers (embedded steel anchors) between the outer layer of the building wall and the textured concrete really made of stainless steel and were these anchors inserted according to the plans and was there a sufficient number of them? Most of the East German large-panel slab blocks, however, have undergone traditional retrofitting. Some modernization work deserves more attention. One example is the modernization of numerous large-panel slab buildings in the Märkisches Viertel housing estate in Berlin. Housing construction was a key political issue in the GDR. In order to provide as much living space as possible for as many people as possible, the construction of serial large slab blocks was favoured. The WBS 70 type was developed in the 1970s by, among others, the Neubrandenburg Housing Combine and became, with the construction of around 650,000 dwellings, the most widely built building type in the German Democratic Republic. In Neubrandenburg, the first apartment blocks built in the Ost district were placed under monument protection in 1984.

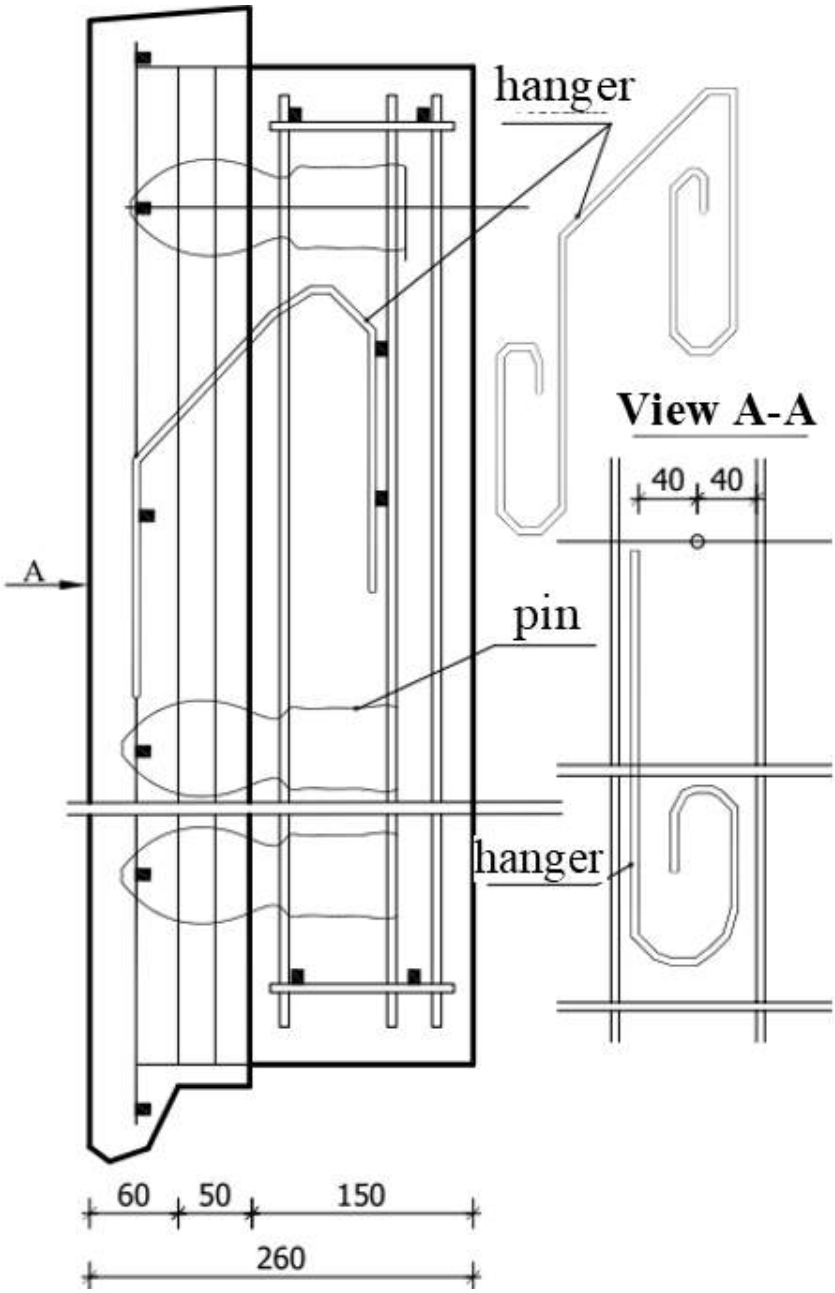

Fig. 1. Cross-section of an external wall of the German WBS 70 type system

Source: Fouad, Cziesielski, 1999. German experiences during rehabilitation of large panel buildings. Konferencja naukowo-techniczna ITB „Możliwości techniczne modernizacji budynków wielkopłytowych na tle ich aktualnego stanu, Mrągowo 3-5 listopada 1999

In buildings erected by 2 construction companies, the outer layers were determined for walls 70 mm thick. The following was determined for these buildings: hanger, pin, View A-A

d = 81 mm

max d90 = 85 mm

min d90 = 77 mm

Visual inspection of the walls revealed no visible damage.

- ✓ Depth of carbonation – measured from the external surface of the wall – was found to be an average t = 10.2 mm and a maximum t90 = 17.3 mm
- ✓ The layer of concrete to reinforcement associated with the external surfaces of the walls was an average of c = 34 mm and a minimum of c90 = 15.5 mm

The probability that the reinforcement is wrapped by the concrete at the time of the test is therefore about 2%, relative to the external surface of the wall (Fig. 2) (Fouad, Cziesielski, 1999).

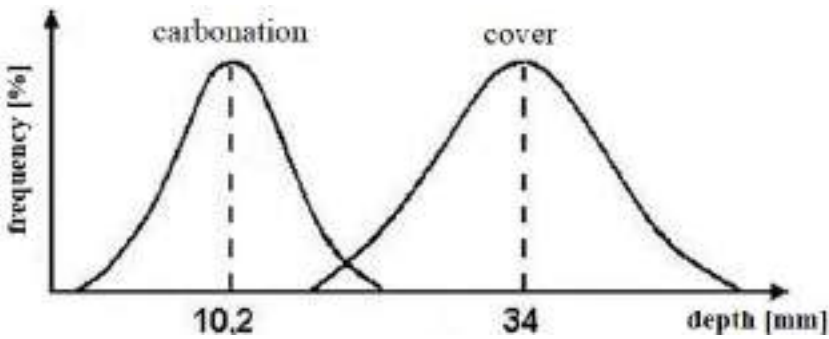

Fig. 2. Probability of steel bars being placed in concrete approximately 2%

A view of the closed gable wall (Fig. 3) with details of the reinforcement (anchors and pins) is an example of a German solution for a large-panel system using WBS 70 technology.

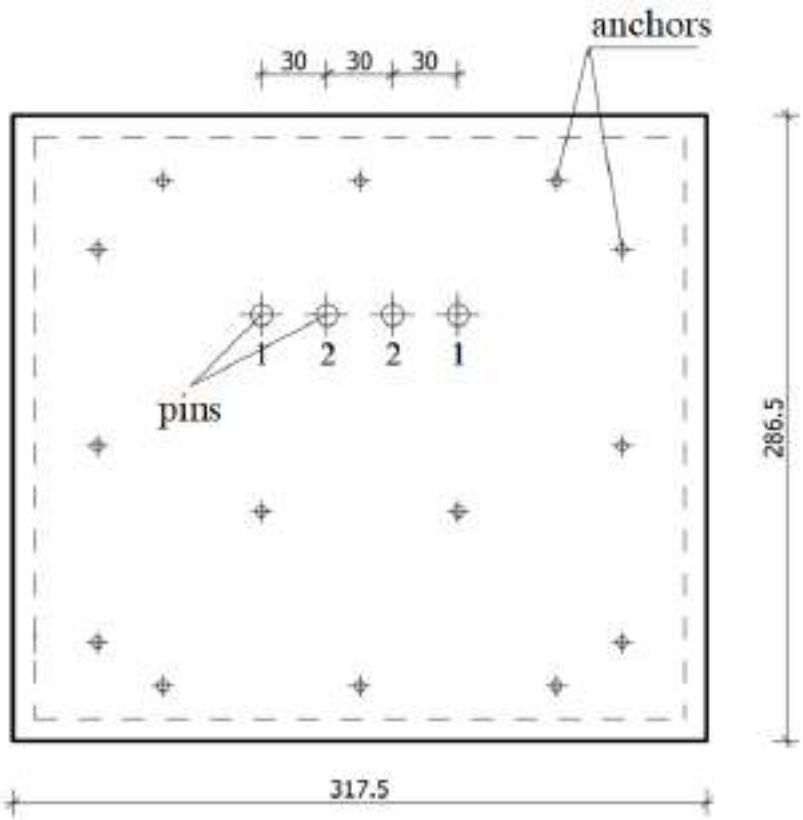

Fig. 3. Wall gable element – type WBS 70

Source: Fouad, Cziesielski, 1999. German experiences during rehabilitation of large panel buildings. Konferencja naukowo-techniczna ITB „Możliwości techniczne modernizacji budynków wielkopłytowych na tle ich aktualnego stanu, Mrągowo 3-5 listopada 1999

With the WBS 70 technology, which was developed in the early 1970s, there was a rapid increase in housing construction in Germany. The system was based on concrete panels of 1.20 m or multiples thereof. It was introduced into the building regulations in 1975, used by architects and planners.

The next element of the WBS 70 technology (Figure 4) shows a wall design with window openings located in the longitudinal walls.

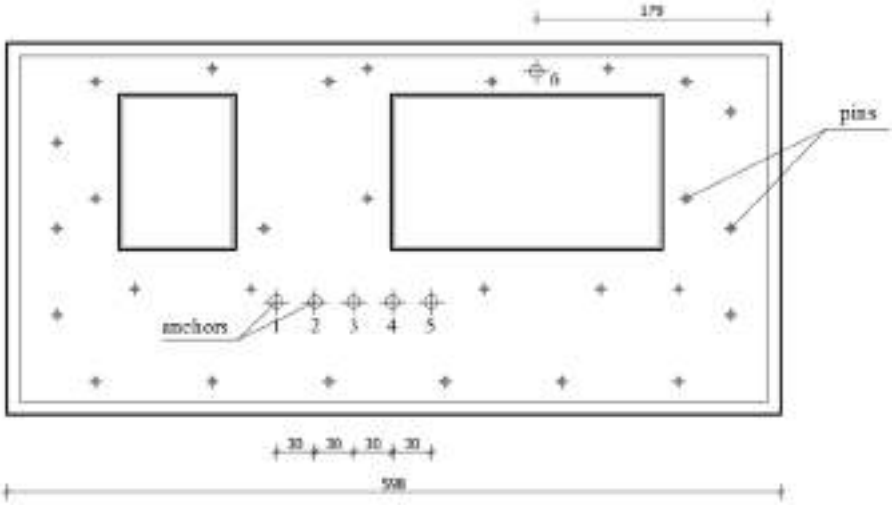

Fig. 4. Vertical wall with window openings – type WBS 70

Source: Fouad N. A., Cziesielski E. (1999). German experiences during rehabilitation of large panel buildings. Konferencja naukowo-techniczna ITB „Możliwości techniczne modernizacji budynków wielkopłytowych na tle ich aktualnego stanu, Mrągowo 3-5 listopada 1999.

The integrated system included: load-bearing elements, elevations, internal finishes, staircases, prefabricated bathrooms, etc. The construction time for one unit was about 4.5 dwellings per day (Keller C., 2005).

German experience (Keller C., 2005) relating to large-panel slab buildings compares favourably. Most load-bearing walls are only structurally reinforced. In general, it must be stated that large-panel slab buildings have spatially stable structures that are safe for the user. This has been established and confirmed by tests. The safety of external three-layer walls is ensured to such an extent that additional cladding can be applied without additional protective measures. Figure 5 shows the housing stock of large-panel slab construction in Germany.

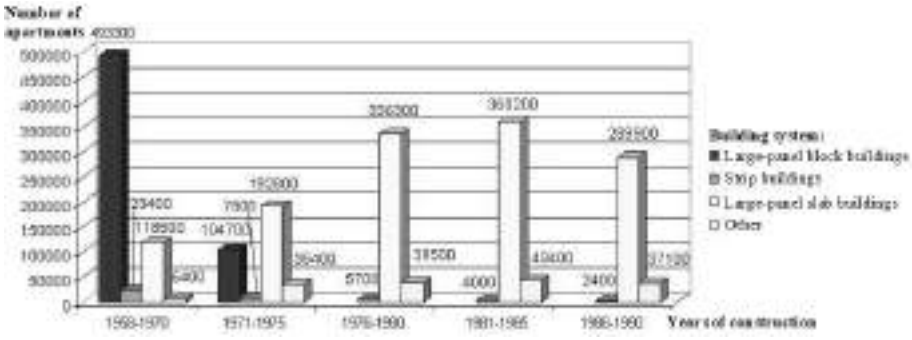

Fig. 5. Number of dwellings in large-panel construction between 1958 and 1990 in Germany

Source: Heyn S., Asmus S., Mettke A., Thomas C. ‚Rückbau industrieller Bausubstanz – Großformatige Betonelemente im ökologischen Kreislauf.' Schlussbericht zum Forschungsvorhaben. Brandenburgische Technische Universität. Cottbus, 2008

By contrast, in France (Henger H.-D., 1999), the beginning of prefabrication was the "meccano" building systems. The years 1960 to 1975 were the time of the greatest use of prefabricated slabs. The limitation of transport options meant that initially the width of the slabs was 1.75 m; and then 1.80 m. Greater progress, and the associated availability of the required means of transport, allowed double width slabs to be used in the 1970s. Initially, these slabs were 3.50 m wide; then 3.60 m wide. These slabs were parts of complete systems that made up the various elements of the structure, e.g.: façade elements, partition walls, ceilings, roof elements, stair seals, attics and ventilation ducts. The history of the large slab is made up of many different building techniques and elements which include: slabs with embedded hollow blocks (Fig. 6), layer panels, solid or ribbed slabs, lightweight concrete slabs and fibre reinforced concrete slabs.

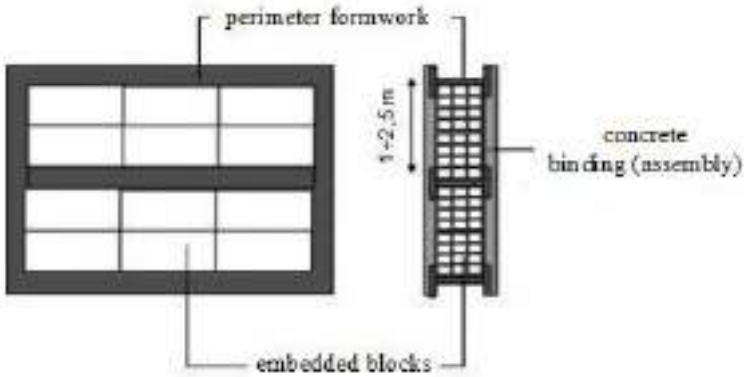

Fig. 6. Structure of panels with embedded hollow blocks

Source: Ruot B. Construction techniques in blocks of flats between 1949 and 1974. Livrable 2, Version 1 – Grenoble, le 4 Juin 2009.

Prefabricated solid panels (Fig. 7) appeared on the French market in the late 1960s. They were completed after installation with adjoining masonry or thermal insulation.

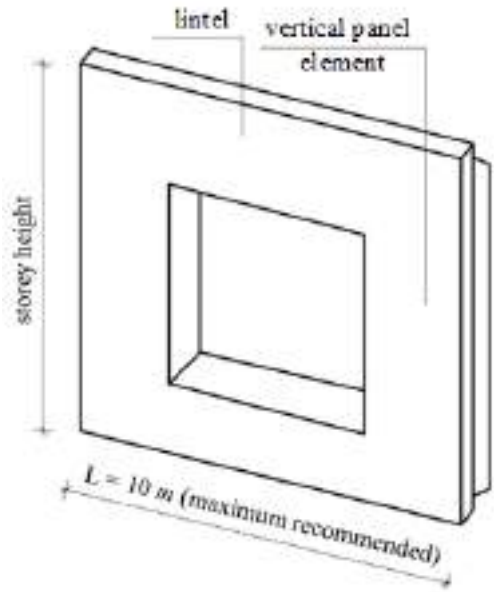

Fig. 7. Prefabricated solid slab

Source: Ruot B. Construction techniques in blocks of flats between 1949 and 1974. Livrable 2, Version 1 – Grenoble, le 4 Juin 2009.

A few years earlier, around 1960, ribbed panels appeared in France (Fig. 8). These were large-size slabs with a retained air void on the outside of the additional wall, made of gypsum blocks, with a layer of polystyrene added over time, which was bonded to the ribs.

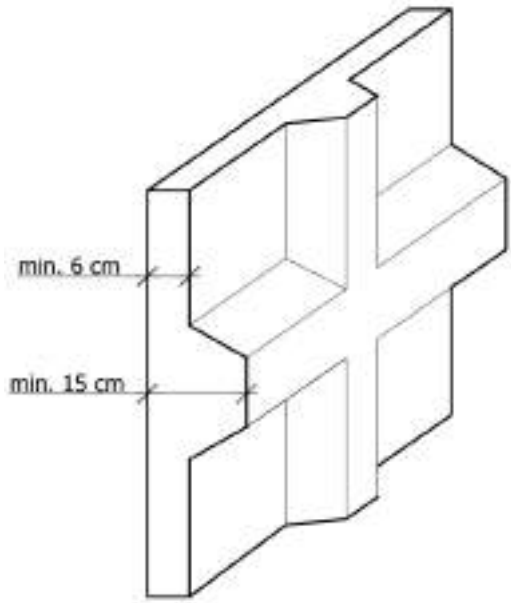

Fig. 8. Prefabricated ribbed slab

Source: Ruot B. Construction techniques in blocks of flats between 1949 and 1974. Livrable 2, Version 1 – Grenoble, le 4 Juin 2009.

The prefabricated panels consisted of two concrete walls with insulation between them. The insulation was an air void (vacuum), reed boards or polystyrene boards [3, 4] (Fouad N. A., Cziesielski E., 1999**,** Keller C., 2005**)**. There were three main types of layer slabs, including two basic types (Fig. 8 and 10).

- ✓ layer slabs with a thin-walled outer shell 6÷7 cm thick and a thick-walled inner shell (12÷15 cm), which were joined together with concrete ribs (Fig. 9). They were discontinued after 1974 in their original form, although attempts were made to use an insulating material in the inner layer.

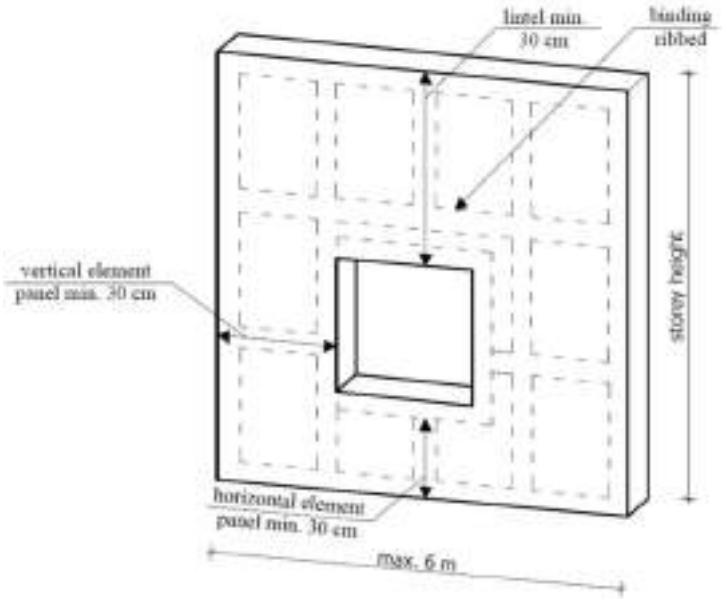

Fig. 9. Jointed layer slab (thin or thick outer casing)

Source: Ruot B. Construction techniques in blocks of flats between 1949 and 1974. Livrable 2, Version 1 – Grenoble, le 4 Juin 2009.

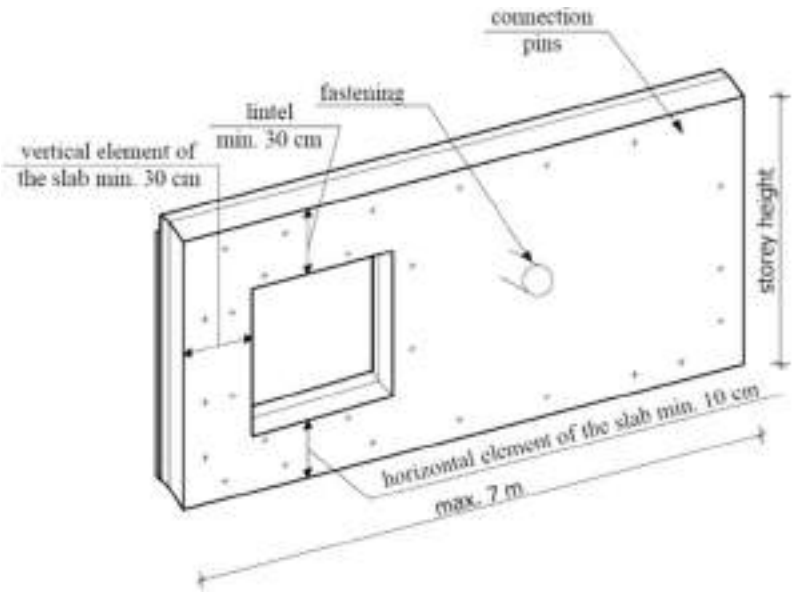

Fig. 10. Freely expandable external layer slab

Source: Ruot B. Construction techniques in blocks of flats between 1949 and 1974. Livrable 2, Version 1 – Grenoble, le 4 Juin 2009.

The counterpart to the OWT large slab system in France were panels with a freely expanding outer layer (Fig. 10) less prone to cracking than the previously mentioned panels and had better thermal properties, although they were more expensive to produce (Ruot B., 2009). The external wall panels of French prefabricated layer construction are described in detail in the technical opinion (Huuhka S. et al., 2015). Figures 11 and 12 show the reinforcement arrangements in a single wall panel of the structural layer and the façade layer, respectively.

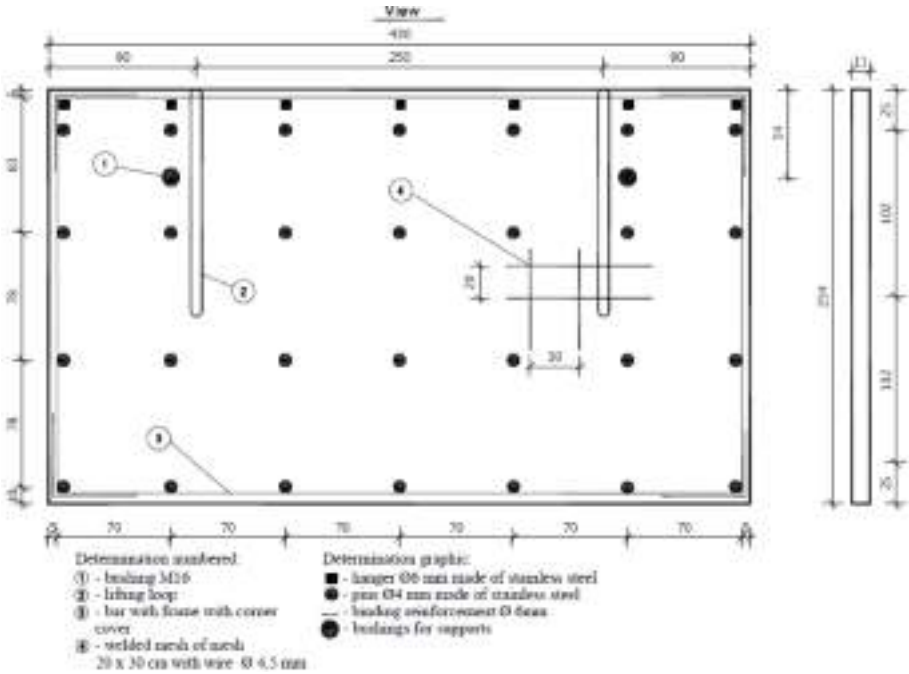

Fig. 11. Example of reinforcement placement in a structural layer

Source: Ruot B. Construction techniques in blocks of flats between 1949 and 1974. Livrable 2, Version 1 – Grenoble, le 4 Juin 2009. Huuhka S. et al., 2015. Reusing concrete panels from buildings for building: Potential in Finnish 1970s mass housing.

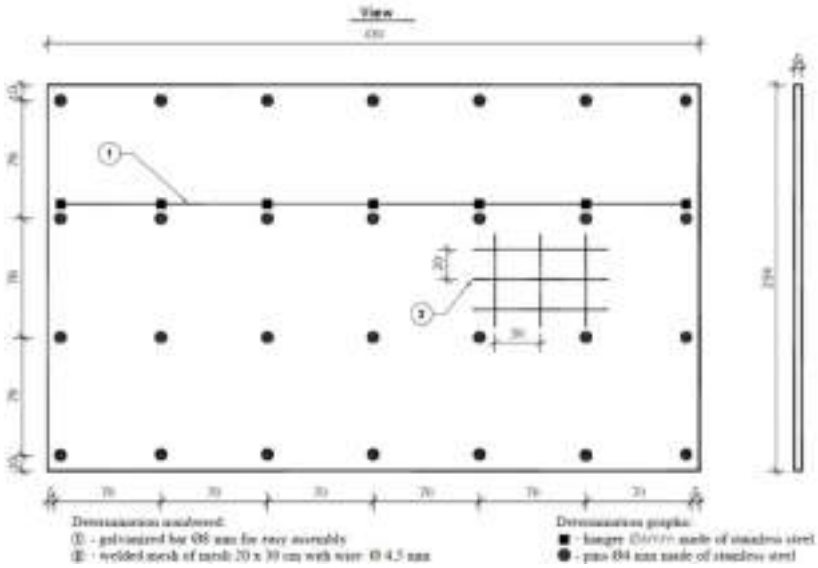

Fig. 12: Example of reinforcement placement in a façade layer

Source: Ruot B. Construction techniques in blocks of flats between 1949 and 1974. Livrable 2, Version 1 – Grenoble, le 4 Juin 2009. Huuhka S. et al., 2015. Reusing concrete panels from buildings for building: Potential in Finnish 1970s mass housing.

Figure 13 shows an example of a vertical wall with an additional panel with a core length of more than 6 *m*.

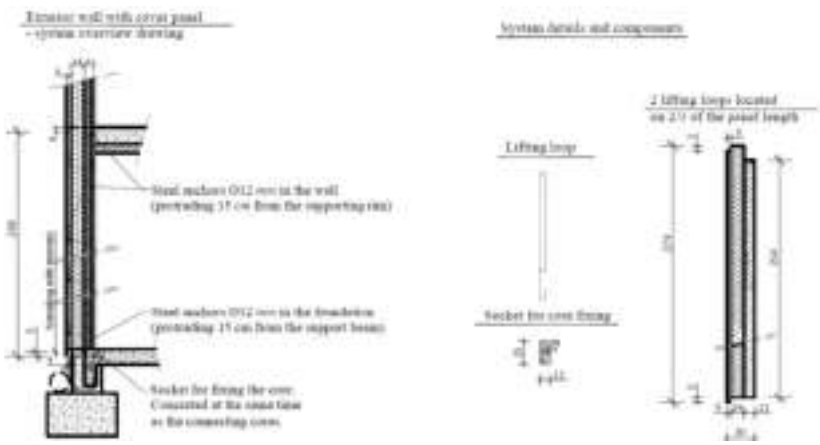

Fig. 13. Cross-section of a French three-layer wall panel

Source: *Huuhka S.* et al. (2015). Reusing concrete panels from buildings for building: Potential in Finnish 1970s mass housing.

Between 1950 and 1955, the search for new construction techniques continued in the Scandinavian countries. There was the beginning of prefabricated concrete, which made it possible to build on an increasingly large scale with unskilled labour.

In Finland, there was an intensive development of large-panel technology from the early 1960s (Figure 14). Open-ended large-panel prefabricated systems (BES) were developed. In 1974, about 70 per cent of multifamily housing construction there was carried out using large-panel technology. One of the most important effects of large-panel slab buildings was considered to be the significant reduction in labour input between 1960 and 1970 from 8 hours/m^3 to 3 hours/m^3.

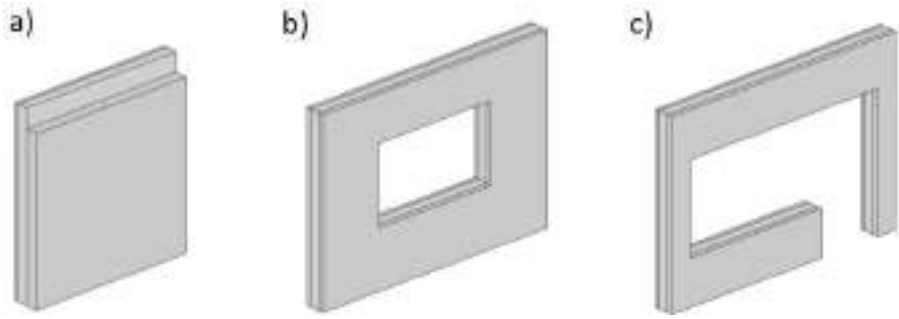

Fig. 14. Three main types of panels in the data: a) blind load-bearing panel, b) typical non-load-bearing panel with a normal window, c) non-load-bearing balcony back wall panel

Source: Zając M. Overview of typical retrofits in longwall buildings. Annales Universitatis Paedagogicae Cracoviensis. 97, Studia Technica 5, 2012, 258-271 (in Polish)

5.3. The genesis of the problems of large-panel slab buildings in Poland

The first references to the construction and design of "large-panel slab" buildings already appeared with the initiation of large slab technology, i.e. in the 1960s. After nearly 60 years of use, these resources are in need of repair and change. The changes concern not only the condition of individual structural elements (texture layer, window joinery or flashings). When adapting the large-panel slab buildings, the aim is to give them a contemporary expression both architecturally and structurally. Structural solutions limited the possibilities for structural changes resulting in less functional rooms (Andriana A. et al. Technology and Disability : Building communication and Creating

Opportunities? 2024. Journal of Advanced Research in Applied Sciences and Engineering Technology). According to current requirements, large-panel buildings should be adapted to the needs of people with various disabilities.

Physical limitations, visual impairments, hearing impairments and mental disorders can create barriers for people with disabilities to access not only public facilities, transport and information, but also large-panel slab buildings. This requires greater efforts from both society and government to create an inclusive environment that reduces these barriers through the use of technology (https://global-lift.pl/wymiary-windy-dla-niepelnosprawych/).

Lifts for the disabled help to overcome architectural barriers. They enable the elderly, people in wheelchairs or young mothers with pushchairs to move safely and comfortably between floors of a building. Nowadays, mobility solutions for people with disabilities or mobility problems have advanced to the point where it is possible to install suitable lifting equipment in long-established buildings. These solutions include:

- home lifts,
- lifting platforms for the disabled people,
- staircase step platforms,
- platform lifts, environmental lifts (Kanoniczak, Operational problems of Poznań's large panel buildings. Chronicle of the City of Poznań: a monthly magazine devoted to cultural affairs of the City of Poznań. 2018, [no] 4, 147-160. 2018 (in Polish).

Modernisation options have to be considered on a case-by-case basis at some stage of the work and relate to the particular problems of regional systems in Poland (Kanoniczak, 2020). The scope of retrofitting works in large-panel slab buildings also applies to modern solutions for the supply balconies based on the aluminium profile frame [5]. A range of modernisation works over the lifetime of large-panel slab buildings was recommended in an ITB report (Szulc et al., 2018). The provisions of this report included:

- the extent and technology of localised repair of scratches (using specialised mortars or fasteners) in external wall joints which do not usually indicate a safety risk to the load-bearing structure of the building, but only vulnerability to corrosion and durability,
- reinforcement of joints of texture layers with structural layers, e.g. behind with the help of steel anchors permitted for use in construction,

also in the case of additional thermal insulation and lack of diagnostic possibilities of assessing the technical condition of three-layer walls,

- insulation of buildings in order to protect the facade surface against destruction of atmospheric factors (with the use of BSO/ETICS system solutions meeting the basic requirements concerning energy efficiency of buildings)" should be treated as obligatory.

The additional instrument of financial support introduced in the law (Ustawa z 20 stycznia 2020 r. o zmianie ustawy o wspieraniu termomodernizacji I remontów. Dz.U. z 12 marca 2020, poz. 412.) for investors carrying out, together with the thermomodernisation project, the strengthening of the texture layers in buildings constructed with large-panel technologies requires 'drawing up technical documentation of the selection and placement of metal anchors'. To date, the preparation of technical documentation for the selection and positioning of metal anchors in the process of building insulation (using BSO/ETICS system solutions) is an individual expert solution (Ligęza W., 2021).

In a building, on floors accessible to persons with disabilities, at least one of the public hygiene and sanitary facilities should be adapted for such persons by:

a) providing a manoeuvring space of at least 1.5 x 1.5 m;

b) using doors without thresholds in these rooms and along the route of access to them;

c) installing a suitably adapted, at least one toilet and washbasin, and one shower, if such facilities are envisaged in the building for its intended use;

d) installing handles to facilitate the use of hygienic and sanitary facilities (Dz. U. 2002 nr 75 poz. 690).

These works involve making new openings in the structural walls (Cholewicki et al. 2003).

Knowledge of large-panel slab buildings regarding their implementation based on foreign and domestic experience is contained in the monographs by Bohdan Lewicki (Lewicki, 1964, 1979). In many aspects of functionality, the stock of large-panel slab buildings needs to be modernised. These include, for example: the modernisation of connections, i.e. water supply and electrical installations. The authors of this article focused exclusively on the structural-technical aspect of the issue, namely the strengthening of the texture layer

in external layer walls. Guidelines and instructions (Instrukcja ITB, 1970) have been issued on how to protect reinforcing steel in three-layer walls, starting with proper execution (Instrukcja ITB, 1969) and ending with subsequent operation (Instrukcja 155 ITB, 1973). The protection of the texture layers in large-panel slab buildings is a matter of priority. The issue of load-bearing capacity of joints in three-layer walls started to be addressed already in the 1980s (Starosolski, Zybura, 1986, Pająk, Starosolski, Zybura, 1986). The experience gained during the manufacture of the layer panels and, above all, the operation, led during the modernisation of external wall systems to the development of the universal hanger (Zybura, Jaśniok, 2006), which provided a higher load-bearing capacity of anchorage in concrete compared to its original solutions. An additional advantage of this new hanger was that it could be used independently of the method of manufacturing and concreting the slabs in the moulds (textured layer "down" or textured layer "up"). The solutions to the structural layouts of the buildings and the possibilities for their repair are described in publication (Lenkiewicz, 1998).

The façade textured layer was at the same time a decorative layer in the three-layer walls of large-panel slab buildings and provided protection for the insulation layer against external influences (temperature, moisture from precipitation, aggressive environment or wind power). Unfortunately, with the passage of time, its stability is increasingly threatened, especially as the revitalisation works carried out to 'revitalise' the large-panel slab buildings impose additional insulation when carrying out thermal modernisation works and give new colours to the facades. The additional insulation, together with the rendering, places an increased load, via the texture layer, on the hangers, which have been worn out over the years and which are integrated into the structural layer. At this point, new system anchors are required. One of the structural systems used in large-panel slab construction is shown in Figure 15.

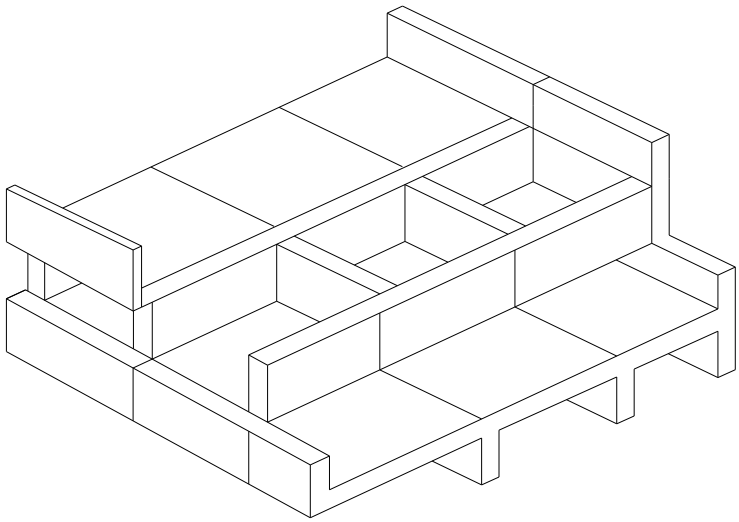

Fig. 15: Cross layout according to which OWT-67 large-panel slab buildings were erected [27]

Source: Lenkiewicz W. (1998). Naprawy i modernizacja konstrukcji budowlanych. Oficyna Wydawnicza PW, Warszawa.

The connecting role between the layers is played by so-called “hangers”, the condition of which affects the fixing of the textured layer (fig. 16). There is a risk that the texture dlayer panels may become detached and fall off as a result of a hanger crack, which directly affects the safety of pedestrians. However, the likelihood of the textured layer slabs coming off varies and depends mainly on the type of steel, i.e. whether the hanger was made of stainless steel or protected against corrosion with a latex coating, or of ordinary galvanised steel or ordinary steel with an aluminium “Azulan” coating.

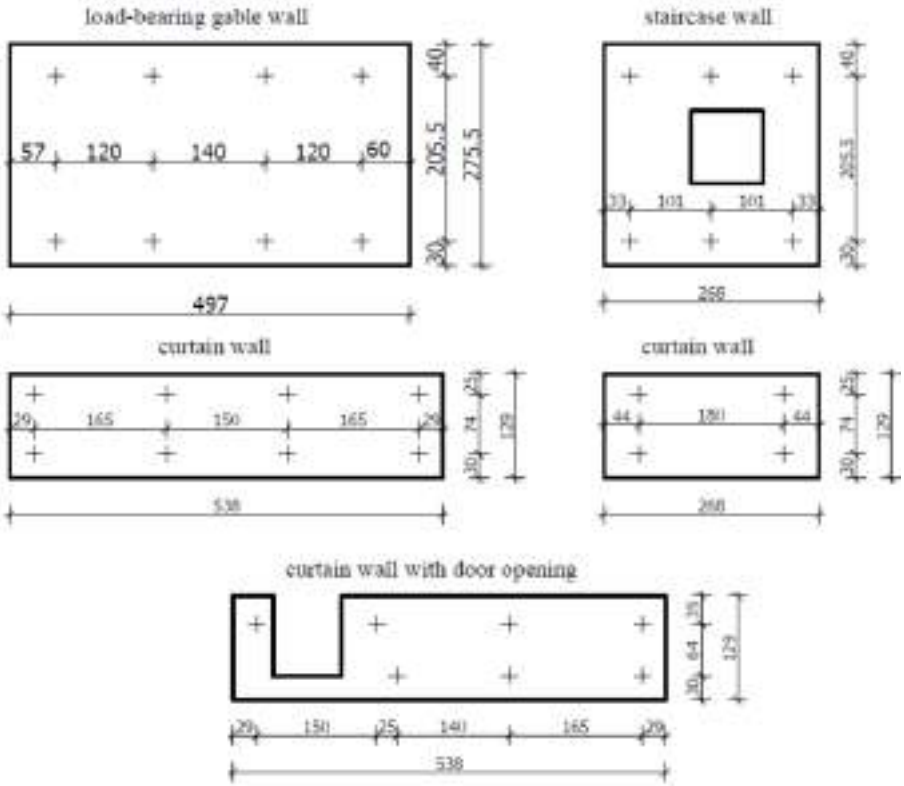

Fig. 16. Arrangement of old "hanger" anchorages in OWT-67 system panels

Source: Lewicki B., Metodyka oceny stanu technicznego konstrukcji budynków wielkopłytowych Instrukcja ITB 371/2002

Source: Instrukcja ITB nr 374/2002 (2002). Metodyka oceny stanu technicznego wielkopłytowych warstwowych ścian zewnętrznych. Dodatkowe połączenia warstwy fakturowej z warstwą konstrukcyjną wielkopłytowych ścian zewnętrznych. Warszawa.

Reinforcing the layer walls of large-panel buildings is a topic that is currently frequently encountered nationally. It cannot be argued that large-panel buildings are 'leaning towards decline'. The problem lies elsewhere. We must remember that when analysing large-panel systems in Poland, with the exception of the Szczecin System and the Great Plaque Ratajska, we are dealing with three-layer external walls. In this article, the issue under consideration concerns the rods connecting the texture layer with the structural layer in large-panel systems. The problem of the durability of the fixing of the texture layer was excellently described in the magazine Inżynier Budownictwa

1/2013 by the Construction Expert, Eng. Kazimierz Staszałek: 'Previous operational experience and test results give grounds for a low assessment of the level of workmanship and installation of layer panel elements, which affects the accelerated degradation of the structure' and 'In the case of poor technical condition of hangers and anchor rods of the surface layer with the structural layer, there is a fear of breaking the connection and, consequently, displacement of prefabricated wall elements in relation to each other' (Staszałek, 2013).

In view of the deteriorating condition of the hangers and the application of an additional layer of insulation from the outside and the consequent increase in the load on them, new screw anchorages should be used to strengthen the layer connections in three-layer walls, designing their anchorages according to American guidelines (ACI Committee 355, 2011).

5.4. Repair and modernization works before thermal insulation of large-panel slab buildings

5.4.1. Diagnostic tests of three-layer elements

Diagnostic testing is carried out to assess the condition of components or structures in order to prevent failure or construction disaster. Diagnostics can be carried out by non-destructive detection methods so as not to damage the structure of the concrete and to be able to locate the reinforcement system in the wall.

Diagnosis (Drobiec, Jasiński, Piekarczyk, 2010, PN-B-01807:1988) is a course of action aimed at making a diagnosis. Problems of diagnostics of building structures with the assessment of technical condition occur most often in the repair, renovation, expansion, reconstruction and modernization of building structures.

Two types of diagnostics are distinguished (Piekarczyk, Drobiec, Jasiński, 2010).: full and periodic. A prerequisite for proper assessment of the technical condition of building walls is the collection of as much information as possible. This applies to both full and periodic diagnostics.

One of the first steps in the visual inspection of the condition of concrete structures is a visual assessment of the structure under examination (Runkiewicz et al., 2014).

The person conducting the visual examination should also familiarize himself with the technical specifications, the construction log, the results

of tests of materials performed during the erection of the structure, and the available results of subsequent tests of the structure, opinions and expert opinions.

In non-destructive diagnostic testing of concrete structures, two varieties of pulse methods, namely the ultrasonic method and the hammer method, are basically used as a supplement to visual testing (Drobiec, Jasiński, Piekarczyk, 2010, Runkiewicz et al., 2014 cz. I, Runkiewicz et al., 2014 cz. II, Szulc, 2017).

When assessing the technical condition of large-panel slab building structures, the first thing to check is the protection of the structure against the effects of exceptional loads, such as the impact of a heavy object on the building or an explosion in its rooms. This is important because the structures of large-panel buildings, due to their lower degree of monolithization, have a limited ability to redistribute internal forces and the presence of free-supporting elements and, therefore, may have a greater susceptibility to a building disaster, progressing as a result of an explosion (Chyży, 2014).

The diagnosis of external three-layer walls in large-panel buildings results in increasing the thermal insulation of these walls. However, this does not involve changing the load-bearing structure of the buildings, but increasing the load on the insulation layer results in the need for new anchorages (Tomaszewicz, Jablonska-Krysiewicz, Szlendak, 2020).

Diagnosis of large-panel slab buildings is necessary and results from the regulations on the maintenance of buildings and their periodic inspections (Journal of Laws of 29/11/2013, item 1409), as well as changes in standard requirements. An important factor in this diagnostics is the evaluation of the protective properties of concrete/mortar against reinforcing steel, based on the tests mentioned in articles (Tomaszewicz, Baryłka, 2020, Tomaszewicz, 2019).

In diagnostic testing of three-layer wall elements in large-panel buildings, reinforcement detectors are applicable. One such device is the Corrosion Profometer (Fig. 17), which serves as a reinforcement corrosion analyzer and additionally has reinforcement detection capabilities.

Fig. 17. Scanning in the curtain wall of a large-panel building of the diameters of: the hanger, the anchor rod and the reinforcement mesh

Source: own photography

The device shown in Figure 16 additionally has the ability to estimate the degree of corrosion of the reinforcement, which is extremely helpful for further work.

5.4.2. The use of new anchorages in the three-layer walls of large-panel slab buildings

The first stage of repair work, namely structural diagnostics, is an important preparation insofar as we have the opportunity, in the absence of design documentation, to locate the reinforcement accurately. This knowledge will facilitate the work contractor's ability to deploy new anchor rods non-invasively.

Anchoring systems can be divided into bonded anchors and mechanical anchors. This article focuses on bonded anchorages because of the many advantages of using this type of anchorage. The main advantage of bonded anchorages, as opposed to mechanical anchorages, is that they do not introduce pre-stress into the concrete substrate. Estimation of the load-bearing capacity of bonded anchors was preceded by experimental tests (Tomaszewicz, 2023).

Reinforcing the exterior walls of large-panel slab buildings characterized in detail in the industry standard (BN-79/8812-01) consists in embedding anchors in a hole made in the three-layer wall structure. They are connectors of the textured layer with the structural layer (ITB Instruction No. 360, 1999).

Some types of anchors are used only for point fixings (Fig. 18). This is the most popular solution used by most construction companies.

The HWB anchor for horizontal fastening is approved for use in all three-layer panel systems, such as W-70; Wk-70; OWT; WUF-T or the Szczecin System. It should be installed in a concrete substrate with a class not lower than B 15 (C 12/15) (www.hilti.pl). HWB bonded anchors have a Technical Approval (DIBt – Deutsches Institut für Bautechnik Hilti HWB-H, 2025).

Fig. 18. HWB-H Ø 22 x 190 mm bonded anchor for reinforcing exterior walls in large-panel slab buildings

Source: www.hilti.pl

The COPY-ECO system consists of two anchors: horizontal and diagonal. They replicate the work of the hanger, and their design allows installation in walls whose structural layer is only 70 mm thick. The COPY-ECO solution can be used, among other things, in buildings made with systems in W-70 and OWT. The COPY-ECO system for reinforcing layer walls of large-panel slab buildings has Technical Approval (ITB-KOT-2020/1166, 2020). A view of the anchor for reinforcing balcony panels is shown in Figure 19, while the COPY-ECO system for reinforcing curtain and gable walls is shown in Figure 20.

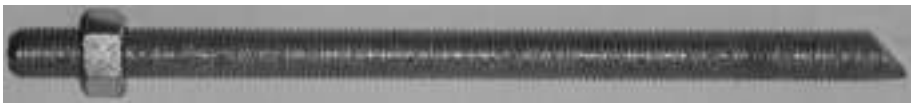

Fig. 19. View of the M20 x 330 mm COPY-ECO reinforcing anchor used in reinforcing balcony panels

Source: own photography

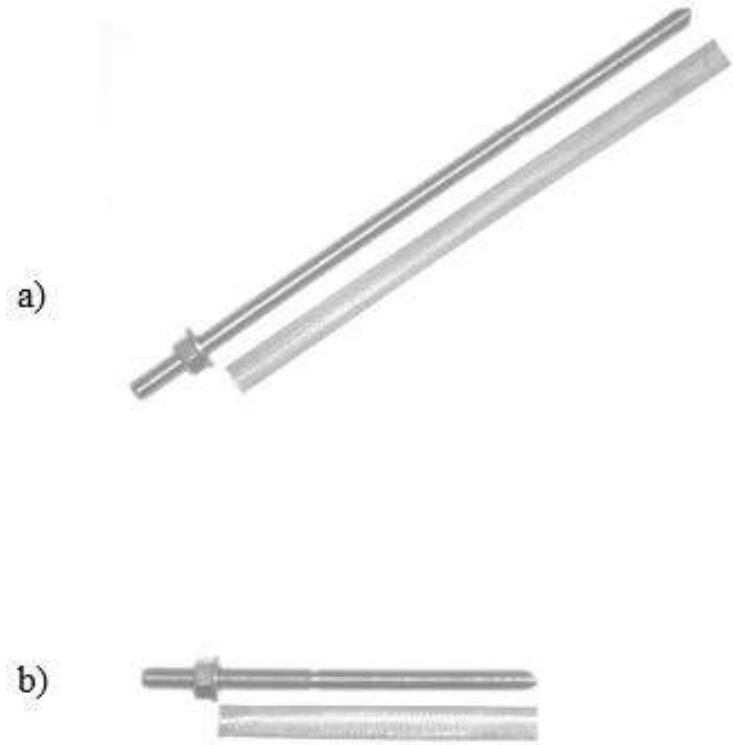

Fig. 20. View of the COPY-ECO anchor system for reinforcing external wall panels of large-panel slab buildings: a) horizontal anchor M12 x 190 mm, b) diagonal anchor M12 x 330 mm

Source: own photography

Figure 21 shows the use of steel screw-in anchors with M12 threaded tendon. The function of the diagonal tendon is to transfer tensile loads from the dead weight of the textured layer to the structural layer. The horizontal

tendon, on the other hand, can carry those tensile loads that would occur if the textured layer were to be stripped.

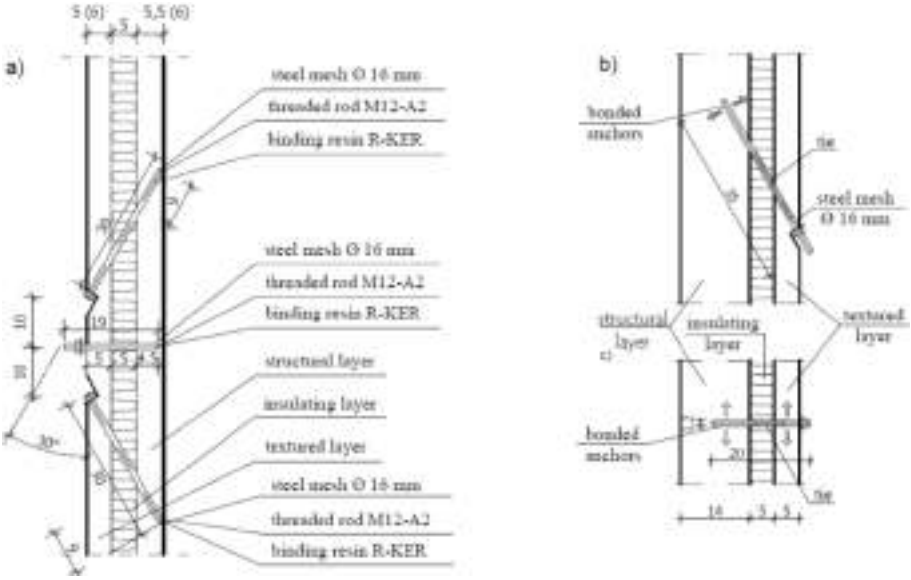

Fig. 21. Diagram of steel tendon connections: a) solutions for staircase walls, b) solutions for gable wall panels

Source: Own survey

Currently, the K2-Arsanit anchor is very popular. It is a steel screw anchor (Fig. 22) for reinforcing layer walls of large-panel slab buildings.

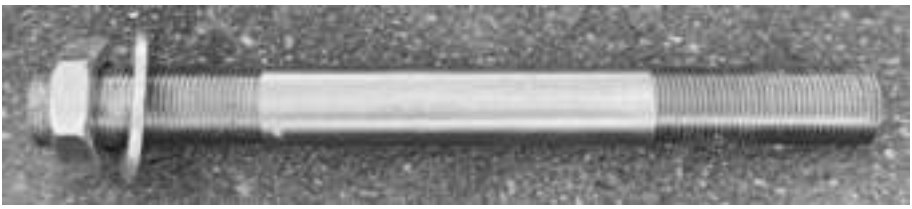

Fig. 22. View of the K2-Arsanit screwed fastener for reinforcing three-layer walls

Source: https://arsanit.pl/wp-content/uploads/2022/12/Ulotka-Kotwa-K2-Internet.pdf

These anchors are characterized by high-quality stainless steel rolled bars with very high load-bearing capacity. The anchor consists of a partially threaded Ø20 mm or Ø24 mm diameter shank, a steel washer and a nut and is fixed into the building wall via resin mortar. An additional advantage is the full control of the depth of drilling the hole when using diamond drill bits. K2-Arsanit screw-in fasteners have the National Technical Assessment ITB-KOT-2022/2239 edition 1 (ITB-KOT-2022/2239, wyd. 1., 2021).

Another system that can be used to reinforce three-layer walls in large-panel slab buildings is the CHEM-SET system from Trutek (Figure 23). This system consists of a TCS threaded rod of two diameters, M20 and M24, along with a nut and washer made of A2 or A4 grade steel, a steel mesh sleeve, and a system resin selected depending on the hole drilling technique. The system has a technical approval AT/2007-03-2292/1 (ETA 12/0129, 2018).

Fig. 23. View of the Trutek TCM bonded anchor

Source: www.trutek.com

The Fischer FIS V Plus M12 x 160 mm bonded anchor (Figure 24) has Technical Approval (ETA-20/0603, 2020).

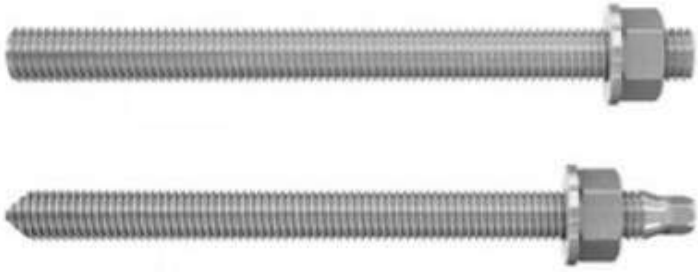

Fig. 24. View of Fischer FIS V Plus M12 x 160 mm bonded anchor

Source: www.fischerpolska.pl

Installation of anchorages and testing should be carried out on the basis of Polish and European guidelines, among others [48, 49, 50]. (EOTA TR 029, 2010, EOTA EAD 330499-00-0601, 2017, ETAG 001, 2001).

5.5. Thermomodernization of large-panel slab buildings

There are regulations directly or indirectly related to the modernization of large slabs. Currently, in this area, a number of initiatives are being taken at the national and European Union level to redefine issues related to the modernization of existing building stock. In the case of Poland, a very significant area in this regard is the modernization of large-panel buildings.

Currently, a number of initiatives such as the Fit for 55 package or REPowerEU are being developed within the EU to create mechanisms for the widespread modernization of buildings. For example, under the Fit for 55 package, the key regulatory changes for the sector are contained in three directives: the Energy Performance of Buildings Directive (EPBD), the Energy Efficiency Directive (EED) and the Renewable Energy Directive (RED). Key reforms in the context of retrofitting multifamily buildings include the introduction of a pan-European zero-emission building standard, a commitment by EU countries to retrofit buildings, the introduction of minimum building energy standards, and an increase in the share of RES in retrofits.

Examples of thermomodernization of large-panel slab buildings are shown in Figures 25-27 realized in the city of Lomza, Poland, in Podlaskie Voivodeship.

Fig. 25. elevation of the building at 30 Spółdzielcza Street in Lomza

Source: own photography.

Fig. 26. Thermal modernization works on the building at 5 Zeromskiego Street in Lomza

Source: own photography.

Fig. 27. Façade of the building at 5 Zeromskiego Street in Lomza

Source: own photography.

Despite bringing obvious benefits, thermal modernization processes face a number of socio-educational and economic barriers to their successful implementation.

One of the main challenges is the high cost and time-consuming nature of renovation work. Thermomodernization requires a large amount of money and can involve a lengthy construction process, which often discourages property owners from deciding to carry it out.

Another major problem is insufficient government support for thermomodernization programs. What is needed are systemic measures that would support the process of thermal modernization of large-panel buildings in the long term, instead of energy subsidies that solve the problem only pointwise, and often support emission-intensive energy sources such as coal and gas. Many citizens lack sufficient knowledge about the benefits of thermal modernization. To address this barrier, it is necessary to create a proactive support system, such as a one stop shop, to help residents throughout the process, and to organize a broad education and information campaign targeting cooperatives, communities and apartment owners.

Currently, there is a shortage of suitably qualified personnel on the market, especially in the field of renewable energy source (RES) installations. This barrier will slowly disappear, as specialized courses have been offered to meet the growing demand for specialists in this field. New courses and professions emerging in the vocational education system will result in the education of new generations of professionals ready to implement thermomodernization. The benefits of thermomodernization are shown in Figure 28.

Fig. 28. Potential benefits of properly carried out thermal modernization

Source: https://pib.net.pl/images/termomodernizacja/PIB_RAPORT_2024.pdf

5.6. EPBD directive on energy performance of buildings

The phase-out of fossil fuels in buildings will become a reality as early as 2040, according to an agreement reached on December 7, 2023 by the EU Council and the European Parliament on the revision of the Energy Performance of Buildings Directive (EPBD).

The European Parliament and the EU Council have reached an agreement on the amendment to the directive passed in 2010. **The Buildings Directive is part of the "Ready for the 55% Goal" package, which is intended to meet the EU's mandatory climate target.** It is to reduce EU greenhouse gas emissions by, at a minimum, 55% (by 2030, compared to 1990 levels) while improving the energy efficiency of EU buildings by at least 55% by 2030.

The main goal of the directive is to trigger a wave of building renovations in the EU and intensify climate-friendly measures in the sector. To achieve this, it is necessary to **modenization between 15% and 30% of the least efficient buildings by 2030, and to eliminate fossil fuel-based heat sources by 2040**.

The new regulations aim to **eliminate fossil fuel-based heating sources**. Ultimately, the EU aims to eliminate emissions from all buildings.

Gas (and other fossil-fuel) boilers are to be taken out of service starting in 2040, **so they will not be allowed to be installed in new buildings starting in 2030**.

Gas and coal stoves will be banned in new single-family homes and other privately-owned buildings, such as blocks of flats handed over by a developer.

The changes will also apply to old buildings. Buildings constructed before the directive comes into force will have to be gradually retrofitted.

Since the new law is a directive, individual member states will have to set out specific measures for phasing out fossil fuels in heating and cooling, with the goal of phasing out fossil-fueled boilers completely by 2040.

5.7. Energy Efficiency Directive (EED)

The Energy Efficiency Directive (EED), which was published on September 20, 2023, replaces the existing 2018 energy efficiency legislation. Its main goal is to reduce final energy consumption across the European Union by 11.7% compared to consumption occurring in 2020. The EED is part of the Fit for 55 package.

The main change in the regulations introduced by the implemented new EED directive is also that all member countries will have to achieve an annual energy savings rate of 1.49% between 2024 and 2030. Until now, by contrast, it was 0.8%. (https://hnl.pl/nowa-dyrektywa-eed-a-zmiany-w-przepisach).

5.8. Renewable Energy Directive (RED)

On October 31, 2023, **Directive (EU) 2023/2413 of the European Parliament and of the Council** of 18 October 2023 amending Directive (EU) 2018/2001, Regulation (EU) 2018/1999 and Directive 98/70/EC with regard to the promotion of energy from renewable sources and repealing Directive (EU) 2015/652 was published.

The RED III Directive will enter into force within 20 days of publication. During the transition period, member states will have **18 months to transpose the new regulations into national law**.

RED III introduces significant changes in the context of renewable energy, reflecting the EU's commitment to sustainability and reducing dependence on fossil fuels. Poland will be required to meet RED III targets in heat, power, industry and transport.

RED III directive – key updates:

- **Renewable energy targets:** the directive sets a more ambitious target of achieving a 42.5% share of renewable energy in total EU energy consumption by 2030, with additional sectoral targets key to reducing greenhouse gas emissions and transitioning to cleaner energy sources.
- **Sectoral targets:** the directive introduces specific targets for the industrial, transport and construction sectors.
- **Accelerated Approval Procedure and Overriding Public Interest:** RED III puts renewable energy-related permits on a fast track to streamline the implementation of green energy projects (promoting biofuels) (https://controlunion.pl/dyrektywa-red-iii/).

5.9. Conclusions

- **Large-panel buildings will continue to be important** in the European and Polish housing stock, but their future hinges on **energy performance retrofits** because EU directives make renovation mandatory and beneficial from an environmental and economic perspective.
- **EPBD sets clear renovation pathways** toward decarbonization of existing buildings by 2050, with staged energy performance standards.

- **EED reinforces energy savings** across sectors, including residential buildings, which makes renovation imperative for meeting national contributions.
- **RED creates renewable energy targets** that favor distributed energy (solar PV, heat pumps) and renewable district heating, providing a framework for reducing emissions in building operations.
- **Policy synergy**: Together, these directives push a transition from inefficient, fossil-reliant construction toward **high-performance, low-emission, renewables-enabled building stock**.

Bibliography

1. Borawski W. (1923). Projektowanie budynków mieszkalnych. Książnica Polska, Lwów–Warszawa.
2. Wierzbicki S. M., Sieczkowski J. (2014). Problemy budownictwa wielkopłytowego. Część 4: Trwałość i możliwości modernizacji. Builder 1/2014, 64–67.
3. Fouad N. A., Cziesielski E. (1999). German experiences during rehabilitation of large panel buildings. Konferencja naukowo-techniczna ITB „Możliwości techniczne modernizacji budynków wielkopłytowych na tle ich aktualnego stanu, Mrągowo 3-5 listopada 1999
4. Keller C. (2005). Life in prefabricated housing. The dynamics of social exclusion, 2005 (in German)
5. Henger H.-D. (1999). Large housing estates and prefabricated buildings – a vision for the future? Konferencja naukowo-techniczna ITB „Możliwości techniczne modernizacji budynków wielkopłytowych na tle ich aktualnego stanu, Mrągowo 3-5 listopada 1999 (in German)
6. Blache B., Salagnac J.-L. (1999). Modernization of prefabricated panel buildings: French experience. Konferencja naukowo-techniczna ITB. Możliwości techniczne modernizacji budynków wielkopłytowych na tle ich aktualnego stanu, Mrągowo 3-5 listopada 1999 (in French)
7. Ruot B. (2009). Construction techniques in blocks of flats between 1949 and 1974. Livrable 2, Version 1 – Grenoble, le 4 Juin 2009 (in French)
8. Huuhka S. et al. (2015). Reusing concrete panels from buildings for building: Potential in Finnish 1970s mass housing

9. Zając M. (2012). Przegląd typowych modernizacji w budynkach wielkopłytowych. Annales Universitatis Paedagogicae Cracoviensis. 97, Studia Technica 5 (2012), 258–271.

10. Andriana A. et al. Technology and Disability : Building communication and Creating Opportunities? 2024. Journal of Advanced Research in Applied Sciences and Engineering Technology. DOI:10.37934/araset.64.1.2534

11. https://global-lift.pl/wymiary-windy-dla-niepelnosprawych/

12. Kanoniczak M. (2018). Problemy eksploatacyjne poznańskich budynków wielkopłytowych. Kronika Miasta Poznania, nr 4, 147–160.

13. Kanoniczak M. (2020). Możliwości modernizacji budynków wielkopłytowych – balkony i loggie. Przegląd Budowlany 5/2020, 27–31.

14. Szulc J. i in. (2018). Budynki wielkopłytowe. Raport o stanie technicznym. ITB, Warszawa, listopad 2018.

15. Ustawa z 20 stycznia 2020 r. o zmianie ustawy o wspieraniu termomodernizacji i remontów. Dz.U. z 12 marca 2020, poz. 412.

16. Ligęza W. (2021). Modernizacja wielkiej płyty – rozwiązania eksperckie czy systemowe? Przegląd Budowlany 9/2021, 40–42.

17. Rozporządzenie Ministra Infrastruktury z 12 kwietnia 2002 r. w sprawie warunków technicznych, jakim powinny odpowiadać budynki i ich usytuowanie.

18. Cholewicki A., Chyży T., Szulc J. (2003). Nowe otwory w ścianach konstrukcyjnych budynków wielkopłytowych. Zeszyt ITB nr 385/2003.

19. Lewicki B. (1964). Wielkowymiarowe budynki mieszkalne. Obliczenia i konstrukcja. Wyd. Arkady, Warszawa.

20. Lewicki B. i in. (1979). Budynki wznoszone metodami uprzemysłowionymi. Wyd. Arkady, Warszawa.

21. Instrukcja wykonywania i stosowania powłoki lateksowo-cementowej do zabezpieczenia stali w betonie. ITB, Warszawa 1970.

22. Instrukcja kontroli dokładności produkcji i montażu budynków wielkopłytowych. ITB, Warszawa 1969.

23. Instrukcja 155: Wytyczne kontroli wykonania i oceny jakości ścian zewnętrznych w budynkach wielkopłytowych. ITB, Warszawa 1973.

24. Starosolski Wł., Zybura A. (1986). Próby oceny efektywności połączeń warstwy fakturowej ścian zewnętrznych. Inżynieria i Budownictwo 1/1986, 11–14.

25. Pająk Z., Starosolski Wł., Zybura A. (1986). Ocena nośności ścian trójwarstwowych z dodatkową izolacją. Przegląd Budowlany 8–9/1986, 408–411.

26. Zybura A., Jaśniok T. (2006). Problemy renowacji warstwy fakturowej ścian trójwarstwowych. XXI Ogólnopolska Konferencja WPPTK, Szczyrk, 8–11 marca 2006.

27. Lenkiewicz W. (1998). Naprawy i modernizacja konstrukcji budowlanych. Oficyna Wydawnicza PW, Warszawa.

28. Staszałek K. (2013). Problemy wzmocnienia wielkiej płyty przed termomodernizacją. Inżynier Budownictwa nr 01 (102), 86.

29. CI Committee 355 Qualification of post-installed adhesive anchors in concrete (ACI 355.4M-11) and commentary". American Concrete Institute, Farmington Hills, Mi, 2011.

30. Drobiec Ł., Jasiński R., Piekarczyk A. (2010). Diagnostyka konstrukcji żelbetowych. Metodyka, badania terenowe, badania laboratoryjne betonu i stali. T. 1, PWN, Warszawa.

31. PN-B-01807:1988. Antykorozyjne zabezpieczenia w budownictwie. Konstrukcje betonowe i żelbetowe. Zasady diagnostyki konstrukcji.

32. Piekarczyk A., Drobiec Ł., Jasiński R. (2010). Wykrywanie wad wewnętrznych konstrukcji żelbetowych. Inżynier Budownictwa 4/2010.

33. Runkiewicz L. i in. (2014). Diagnozowanie i modernizacja budynków wielkopłytowych. Część 1. Przegląd Budowlany 7–8/2014, 54–60.

34. Runkiewicz L. i in. (2014). Diagnozowanie i modernizacja budynków wielkopłytowych. Część 2. Przegląd Budowlany 9/2014, 20–26.

35. Szulc J. (2017). Procedury diagnostyczne budynków wielkopłytowych. Materiały Budowlane 8/2017, 29–31.

36. Chyży T. (2014). Wybuchy gazu w budynkach mieszkalnych. Wybuch wentylowany. Biuletyn WAT, t. LXIII, nr 3, 159–173.

37. Tomaszewicz D., Jablonska-Krysiewicz A., Szlendak J. K. (2020). The effect of the stress distribution of anchorage and stress in the textured layer on the durability of new anchorages – Open Engineering Volume 10: Issue 1, Pages 705–711, 2020, eISSN 2391-5439, DOI: https://doi.org/10.1515/eng-2020-0079

38. Tomaszewicz D., Baryłka A. (2020). Wpływ kształtu powierzchni kotew wklejanych na ich nośność. Materiały Budowlane 6/2020, 52–53.
39. Tomaszewicz D. (2019). The genesis of the problem of durability of bonded anchors in three-layer walls of large-panel slab buildings in the aspect of their extended durability – III Międzynarodowa Konferencja Naukowo-Techniczna Problemy Inżynierii Bezpieczeństwa Obiektów Antropogenicznych, Warszawa, 19-20.09.2019
40. Tomaszewicz D. (2023). Badania interakcyjnej nośności kotew wklejanych mocujących warstwę fakturową w budownictwie wielkopłytowym. [Rozprawa doktorska – Promotor: prof. dr hab. inż. Jerzy Kazimierz Szlendak]
41. BN-79/8812-01. Konstrukcje budynków wielkopłytowych. Projektowanie i obliczenia statyczno-wytrzymałościowe.
42. ITB Instrukcja nr 360/99. Badania i ocena paneli warstwowych w budownictwie mieszkaniowym. Warszawa, 1999.
43. AT-15-6173/2015. Kotwy wklejane HWB-H do wzmacniania ścian warstwowych. **ITB.**
44. AT-15-6916/2014. Kotwy wklejane COPY-ECO do wzmacniania ścian warstwowych. ITB.
45. ITB-KOT-2022/2239, wyd. 1. Kotwy wklejane K2-Arsanit/2021 do wzmacniania ścian warstwowych z betonu i żelbetu.
46. AT/2007-03-2292/1. Kotwy wklejane TCM i TSC/THC w systemie CHEM-SET. IBDiM.
47. AT-15-8273/2010. Kotwy wklejane Fischer FIS P/UPAT UPM 11. ITB.
48. EOTA TR 029 „Design of bonded anchors”, 2010.
49. EOTA EAD 330499-00-0601. (2017). Bonded fasteners for use in concrete.
50. ETAG 001. Kotwy metalowe do stosowania w betonie. Metody projektowania zakotwień.

ISBN 978-83-68680-20-1
publication no. 255